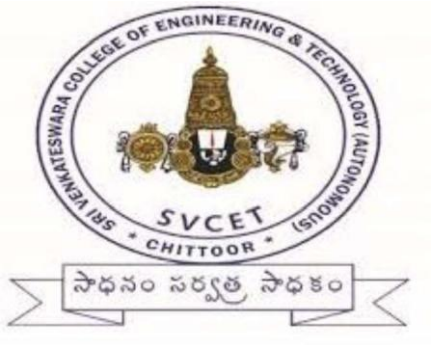

SRI VENKATESWARA COLLEGE OF ENGINEERING AND TECHNOLOGY

(AUTONOMOUS)

R. V. S. NAGAR, CHITTOOR-517127

DEPARTMENT OF MECHANICAL ENGINEERING

COMPUTER AIDED MACHINE AND PRODUCTION DRAWING LAB – 20AME12

Name of the student: _____

Roll Number: _____ Branch: _____

Name of the Laboratory: _____

Year & Sem: _____ Academic Year: _____

SRI VENKATESWARA COLLEGE OF ENGINEERING AND TECHNOLOGY
(AUTONOMOUS)
R.V.S. NAGAR, CHITTOOR-517 127, ANDHRA PRADESH
DEPARTMENT OF MECHANICAL ENGEERING

Vision of Mechanical Engineering

Providing excellent technical education in Mechanical Engineering with the help of state of art infrastructure and carvethe youth to suit the global needs.

Mission of Mechanical Engineering

Provide excellent Teaching-Learning process using state of art facilities to help a holistic growth in the disciplines of Thermal, Design, Manufacturing, Management and Quality areas with an emphasis on practical applications. Stimulate innovative thinkingleading to higher learning.

SRI VENKATESWARA COLLEGE OF ENGINEERING AND TECHNOLOGY
(AUTONOMOUS)
R.V.S. NAGAR, CHITTOOR-517 127, ANDHRA PRADESH
DEPARTMENT OF MECHANICAL ENGINEERING

Programme Educational Objectives (PEO's) of UG:

PEO1	Pursue higher education in the varied fields of mechanical engineering and management.
PEO2	Secure a career placement in core and allied areas
PEO3	Develop skills to undertake entrepreneurship and lifelong learning

PROGRAMME SPECIFIC OUTCOMES (PSOs) of UG

PSO1	Apply the knowledge of manufacturing, thermal and industrial engineering to formulate, analyze and provide solutions to the problems related to mechanical systems
PSO2	Apply the design concepts and modern engineering software tools to model mechanical systems in various fields such as machine elements, thermal, manufacturing, industrial and inter-disciplinary fields.

SRI VENKATESWARA COLLEGE OF ENGINEERING & TECHNOLOGY

[AUTONOMOUS]

DEPARTMENT OF MECHANICAL ENGINEERING

DO'S

- Wear uniform, shoes & safety glasses
- Please follow instructions precisely as instructed by your supervisor.
- If any part of the equipment fails while being used, report it immediately to your supervisor.
- Students should come with thorough preparation for the experiment to be conducted.
- Students will not be permitted to attend the laboratory unless they bring the practical recordfully completed in all respects pertaining to the experiment conducted in the previous class.
- All the calculations should be made in the observation book. Specimen calculations for oneset of readings have to be shown in the practical record.
- Wherever graphs are to be drawn, A-4 size graphs only should be used and the same shouldbe firmly attached to the practical record.
- Practical record should be neatly maintained.
- Students should obtain the signature of the staff-in-charge in the observation book aftercompleting each experiment.
- Theory regarding each experiment should be written in the practical record before procedurein your own words.

DONT'S

- Do not touch hot work piece
- Do not start the experiment unless your setup is verified & approved by your supervisor.
- Do not leave the experiments unattended while in progress.
- Do not crowd around the equipment's & run inside the laboratory.
- Don't wear rings, watches, bracelets or other jewellery
- Don't wear neck ties or loose turn clothing of any kind.
- Do not eat or drink inside labs.
- Do not wander around the lab and distract other students
- Do not use any machine that smokes, sparks, or appears defective

INDEX

S.No.	Date	Name of the Experiment	Signature of the Faculty

SRI VENKATESWARA COLLEGE OF ENGINEERING AND TECHNOLOGY(AUTONOMOUS)
III B.Tech – II Semester

L	T	P	C
-	-	3	1.5

20AME12 Computer Aided Machine and Production Drawing Lab

Pre-request: Computer Aided Engineering Drawing
Outcomes: After completion of the course, the student will be able to: 1. Demonstrate the conventional representations of materials and machine components. 2. Model the three-dimensional machine components using CAD system. 3. Create assembly models of the machine parts and sectional views of machine components using modelling software. 4. Create manufacturing drawing with dimensional and geometric tolerances.

I. DRAWING OF MACHINE ELEMENTS AND SIMPLE PARTS *a) Conventional representation of materials, common machine elements and parts such as screws, nuts, bolts, keys, gears, webs, ribs. b) Popular forms of Screw threads, bolts, nuts, stud bolts, tap bolts, set screws. c) Keys, cotter joints and knuckle joint. d) Riveted joints for plates e) Bushed journal, foot step bearing.*

II .PRODUCTION DRAWING PRACTICE : I. *Assembly of Assembly of bolt and nut with different screw thread, Assembly of keys and cotter joints, Riveted joints Couplings Stuffing box Petrol engine connecting rod, Eccentric, Screw jack, Plummer block, Light duty non return valve, Details of slip bush, Main spindle of lathe tail stock,Single tool post*
II. *Tolerances of Form and position: Symbols representing the characteristics to be Tolerance-Indication of Geometrical Tolerances on a Drawing -Indication of Surface roughness & machining symbols.*
***** ***Part drawing will be generated and assembled in the solid works soft ware.List of Experiments :*** *1. Assembly of bolt and nut with different screw thread. 2. Assembly of keys and cotter joints. 3. Riveted joints 4. Couplings 5. Stuffing box 5. Petrol engine connecting rod 6. Eccentric 7. Screw jack 8. Plummer block 9. Light duty non return valve 10. Details of slip bush 11. Main spindle of lathe tail stock 12. Single tool post*

Text Books: *1. K.L. Narayana, P. Kannaiah & K. Venkata Reddy, Machine Drawing, NewAge Publishers 4th Edition,2012.*
2. R.K. Dhawan, Machine Drawing, 2nd Edition, S. Chand Publications, 1996.

I. DRAWING OF MACHINE ELEMENTS AND SIMPLE PARTS

CONVENTIONAL REPRESENTATION OF MATERIALS

Type	Convention	Material
Metals		Steel, Cast Iron, Copper and its Alloys, Aluminium and its Alloys, etc.
		Lead, Zinc, Tin, White-metal, etc.
Glass		Glass
Packing and Insulating material		Porcelain, Stoneware, Marble, Slate, etc.
	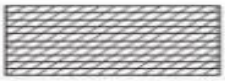	Asbestos, Fibre, Felt, Synthetic resin products, Paper, Cork, Linoleum, Rubber, Leather, Wax, Insulating and Filling materials, etc.
Liquids		Water, Oil, Petrol, Kerosene, etc.
Wood		Wood, Plywood, etc.
Concrete		A mixture of Cement, Sand and Gravel

Conventional Representation of Materials

CONVENTIONAL REPRESENTATION OF MACHINE COMPONENTS

Title	Subject	Convention
Straight knurling	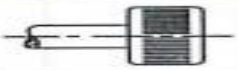	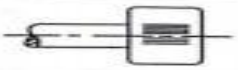
Diamond knurling	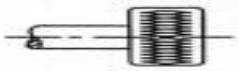	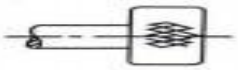
Square on shaft	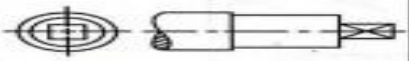	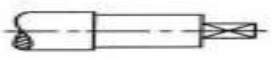
Holes on circular pitch		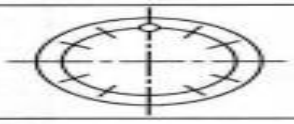
Bearings	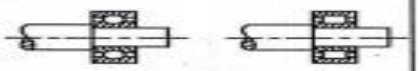	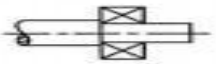
External screw threads (Detail)	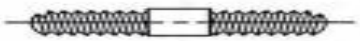	
Internal screw threads (Detail)	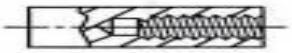	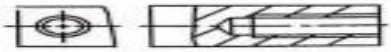
Screw threads (Assembly)	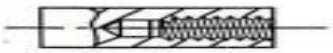	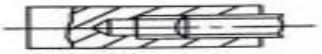

CONVENTIONAL REPRESENTATION OF MACHINE COMPONENTS

Title	Subject	Convention	
Splined shafts	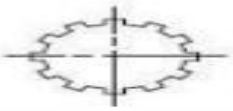		
Interrupted views		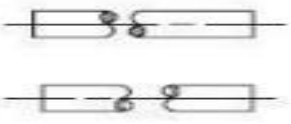	
Semi-elliptic leaf spring		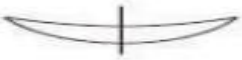	
Semi-elliptic leaf spring with eyes		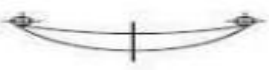	
	Subject	Convention	Diagrammatic Representation
Cylindrical compression spring			
Cylindrical tension spring			

CONVENTIONAL REPRESENTATION OF MACHINE COMPONENTS

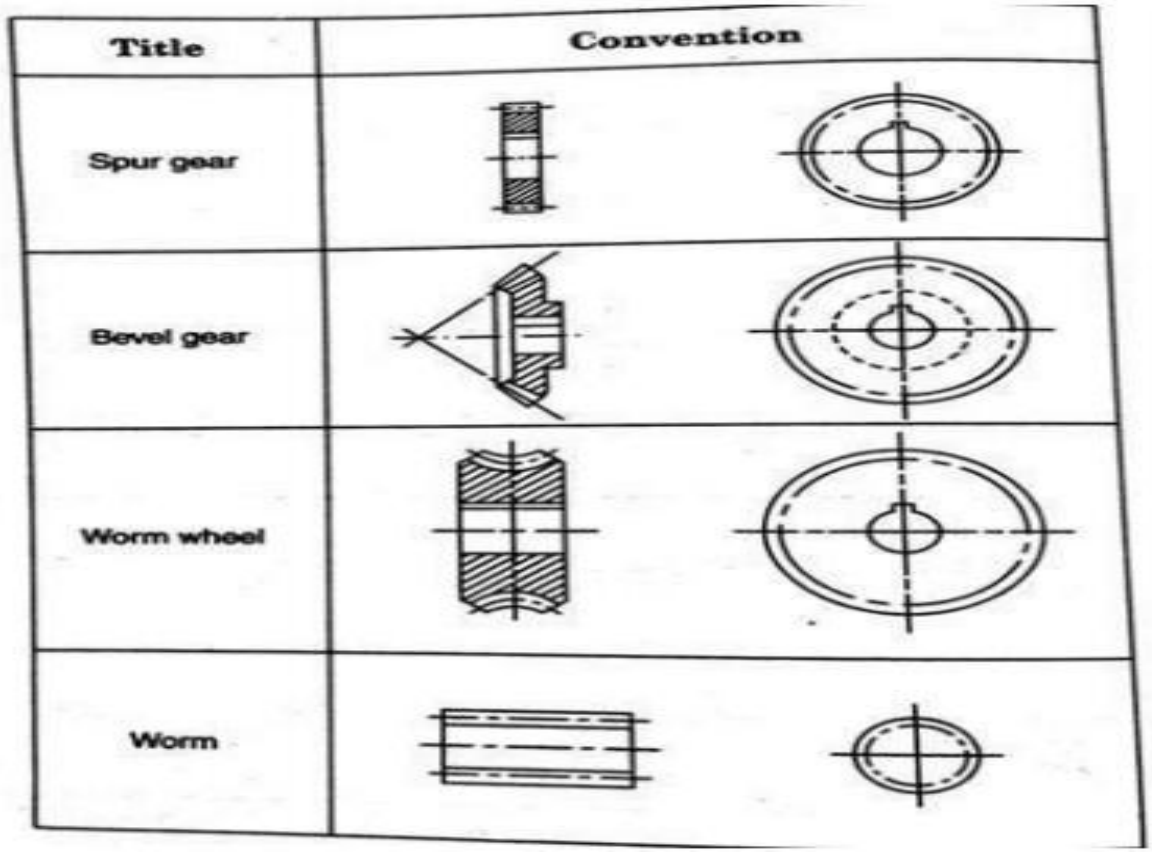

Hexagonal and square Headed bolts

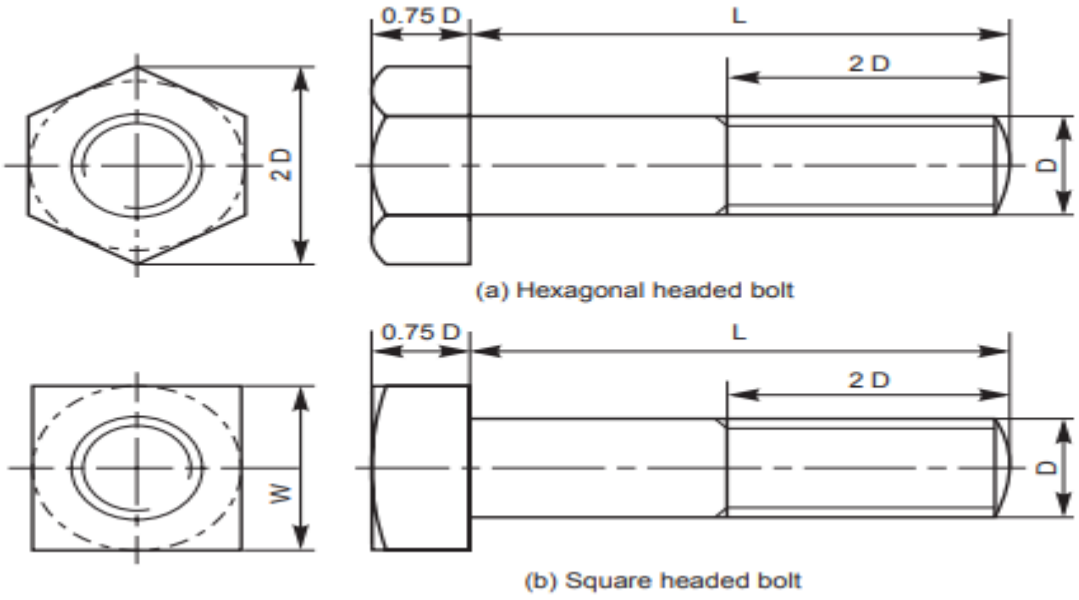

Hexagonal Nut

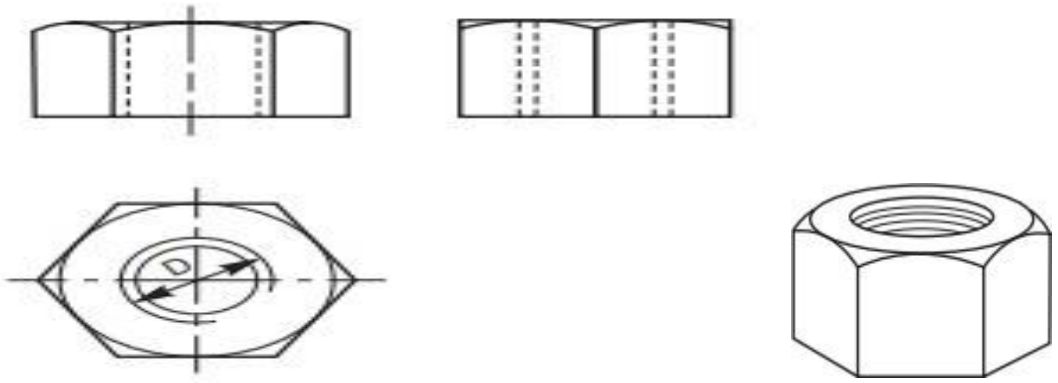

Gib Head Key

If D is the diameter of the shaft, then,

Width of key, W	= 0.25 D + 2 mm
Thickness of key, T	= 0.67 W (at the thicker end)
Standard taper	= 1:100
Height of head, H	= 1.75 T
Width of head, B	= 1.5 T

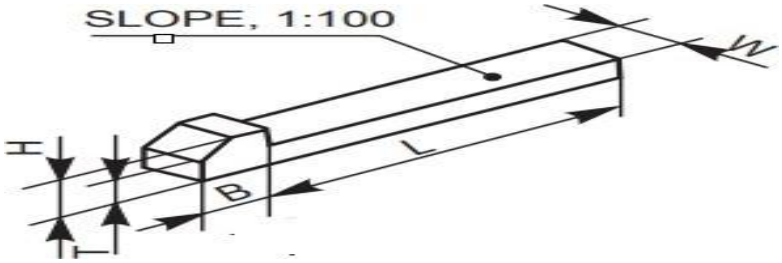

Knuckle joints are used in suspension links, air brakearrangement of locomotives.

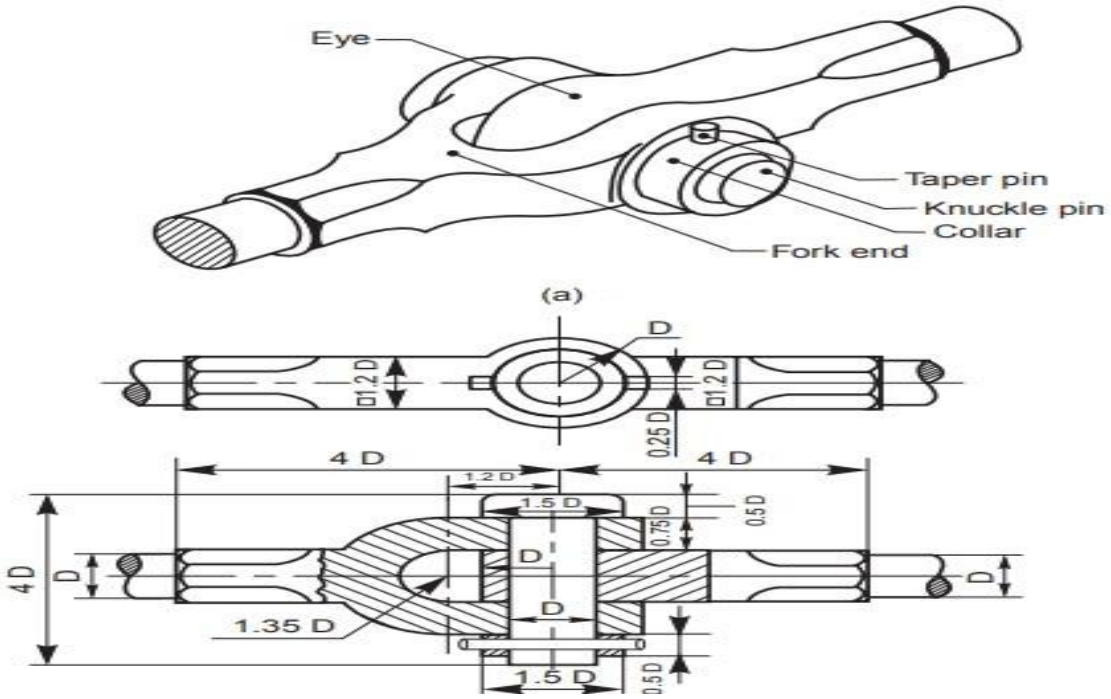

Bushed journal Bearing

This bearing consists of mainly two parts, the body and the bush. The body is usually made of cast iron and the bush of soft materials such as brass, bronze or gunmetal. The bush is press fitted in the body; preventing relative axial and rotary motion. With this arrangement, to renew the bearing, it is only necessary to renew the bush

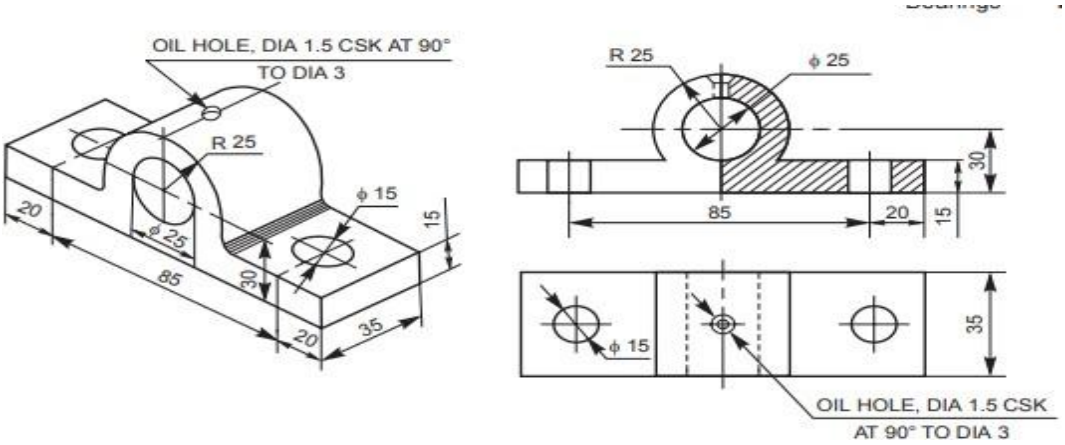

Footstep Bearing:

This bearing is used to support a vertical shaft under axial load. Further, in this, the shaft is terminated at the bearing. The bottom surface of the shaft rests on the

surface of the bearing which is in the form of a disc. The bush fitted in the main body supports the shaft in position and takes care of possible radial loads comingon the shaft

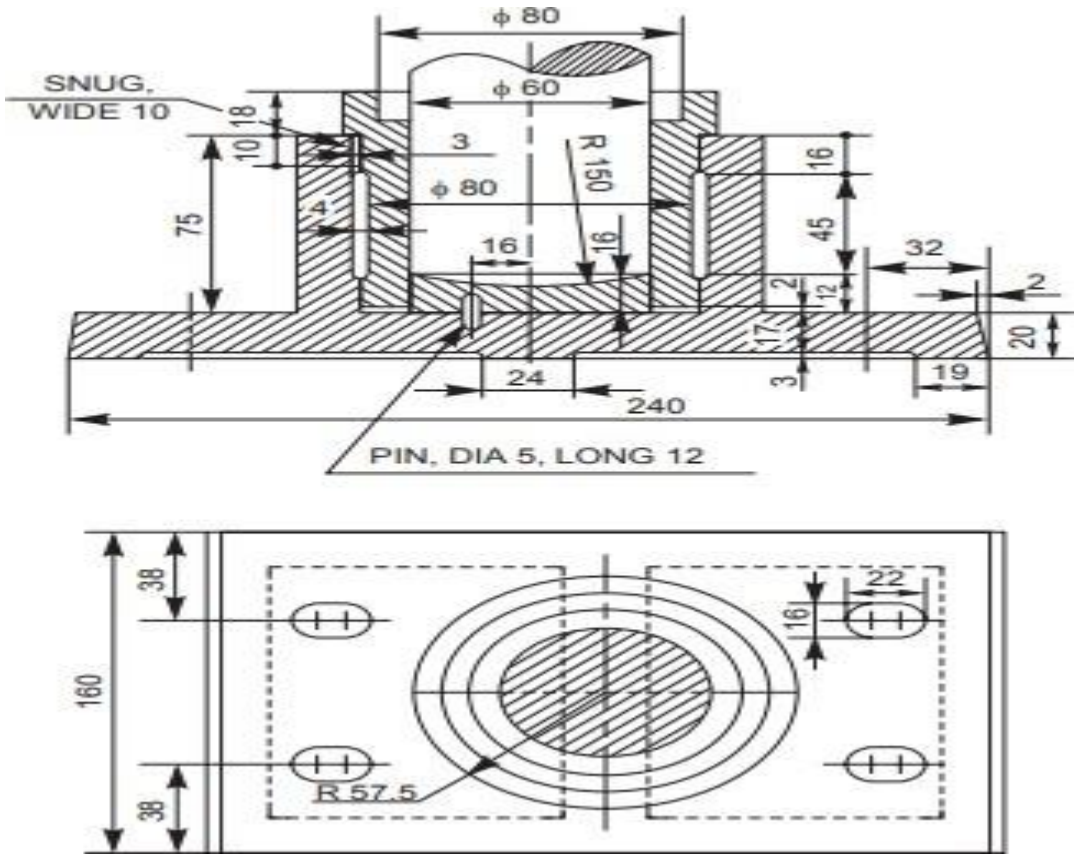

II.PRODUCTION DRAWING PRACTICE

Characteristics to be toleranced		*Symbols*
Form of single features	Straightness	
	Flatness	
	Circularity (roundness)	
	Cylindricity	
	Profile of any line	
	Profile of any surface	
Orientation of related features	Parallelism	
	Perpendicularity (squareness)	
	Angularity	
Position of related features	Position	
	Concentricity and coaxiality	
	Symmetry	
	Run-out	

FORM AND POSITIONAL TOLERANCES

As per the standard	*As prevalent in industry*
1. Straightness tolerance	
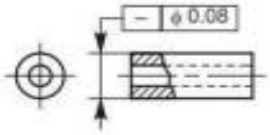	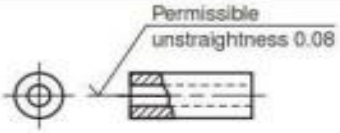
2. Flatness tolerance	
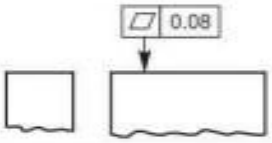	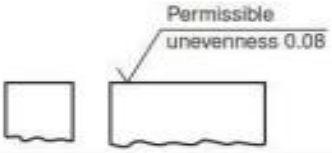
3. Circularity tolerance	
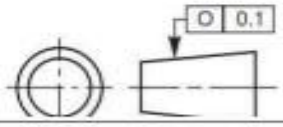	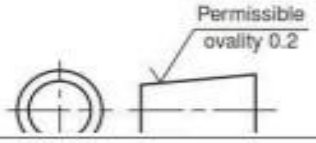
4. Cylindricity tolerance	
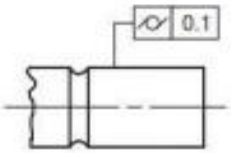	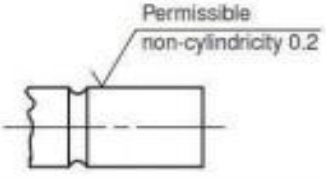

5. Parallelism tolerance

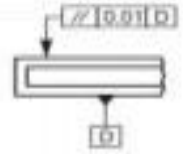

6. Perpendicularity tolerance

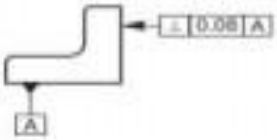

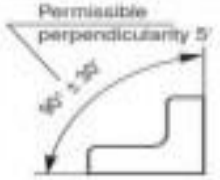

7. Angularity tolerance

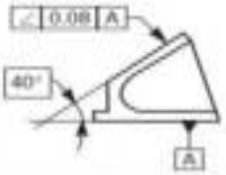

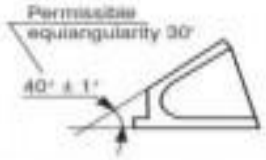

8. Concentricity and coaxiality tolerance

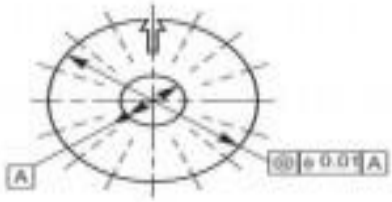

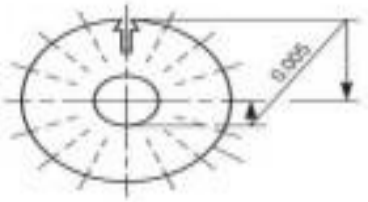

9. Symmetry tolerance

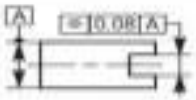

10. Radial run-out

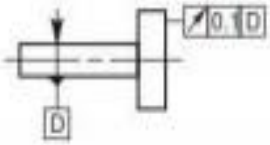

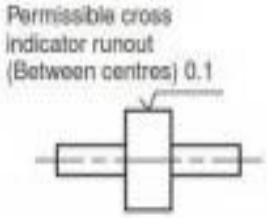

11. Axial run-out

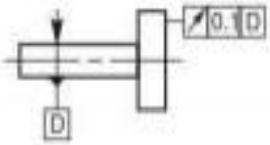

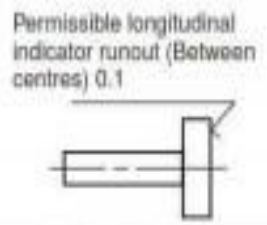

Systems of indication of tolerances of form and of position

SURFACE ROUGHNESS AND ITS INDICATION

Surface Roughness: The properties and performance of machine components are affected by the degree of roughness of the various surfaces. The higher the smoothness of the surface, the better is the fatigue strength and corrosion resistance. Friction between mating g parts is also reduced due to better surface finish.

Surface Roughness Number: The surface roughness number represents the average departure of the surface from perfection over a prescribed sampling length and is expressed in microns.

$$R_a = \frac{h_1 + h_2 + h_3 + \ldots + h_n}{n}$$

The surface roughness may be measured, using any one of the following:

1. Straight edge
2. Surface gauge
3. Optical flat
4. Tool makers Microscopes
5. Profilometer
6. Profilograph
7. Talysurf

Machine Symbols: The basic symbol consists of two legs of unequal length, inclined at approximately 60° to the line, representing the surface considered. This symbol may be used where it is necessary to indicate that the surface is machined, without indicating the grade of roughness or the process to be used.

(a) (b) (c) (d)

a) Basic symbol.
b) Material Removal is Not Allowed
c) emoval Of Material is Allowed.
d) pecial surface characteristics

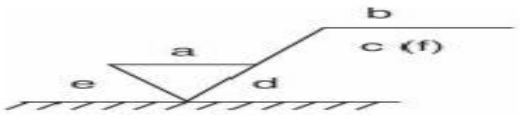

Indication of Machining Allowance

Roughness values R_a *μm*	*Roughness grade number*	*Roughness grade symbol*
50	N12	
25	N11	
12.5	N10	
6.3	N9	
3.2	N8	
1.6	N7	
0.8	N6	
0.4	N5	
0.2	N4	
0.1	N3	
0.05	N2	
0.025	N1	

Equivalent surface roughness symbols

Indication of Special Roughness Characteristics: In certain circumstances, for functional reasons, it may be necessary to specify additional special requirements, concerning surface roughness. If it is required that the final surface texture be

produced by one particular production method, this method should be indicated on an extension of the longer arm of the symbol. Also, any indications relating to treatment of coating may be given on the extension of longer arm of the symbol

Symbol	*Interpretation*	
=	Parallel to the plane of projection of the view in which the symbol is used	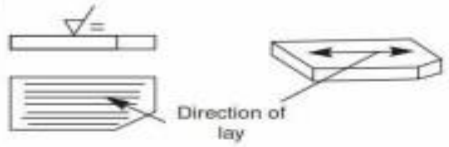
⊥	Perpendicular to the plane of projection of the view in which the symbol is used	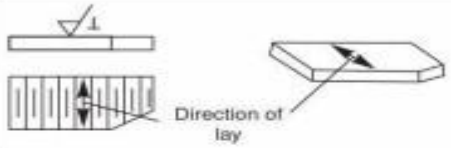
X	Crossed in two slant directions relative to the plane of projection of the view in which the symbol is used	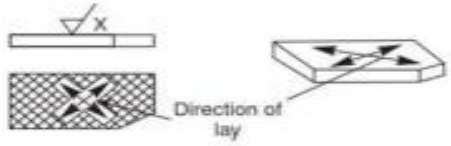
M	Multi-directional	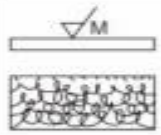
C	Approximately circular, relative to the centre of the surface to which the symbol is applied	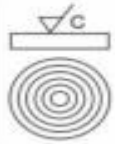
R	Approximately radial, relative to the centre of the surface to which the symbol is applied	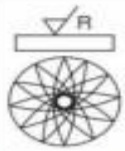

Symbols specifying the directions of lay

Experiments : 1. Assembly of bolt and nut with different screw thread

DETAILS AND MODELING OF INTERNAL AND EXTERNAL THREAD OF BOLTAND NUT USING SOLID WORKS

AIM : To model a bolt and nut by creating, modifying assembling and manipulatingvarious features by feature based parametric solid modeliing and detailing .

Tools: Personal computer with Pentium IV processor with windows xp/windows-7and solidworks software.

1. *Procedure: Create a 2D sketch on Front Plane as shown in the figure.*
2. *(Right click the Front plane>insert sketch and draw the 2D sketch)*
3. *Note: All the 2D sketches drawn should be fully Defined and there should notbe any under defined) and use (click Add Relation and Smart Dimensions)*

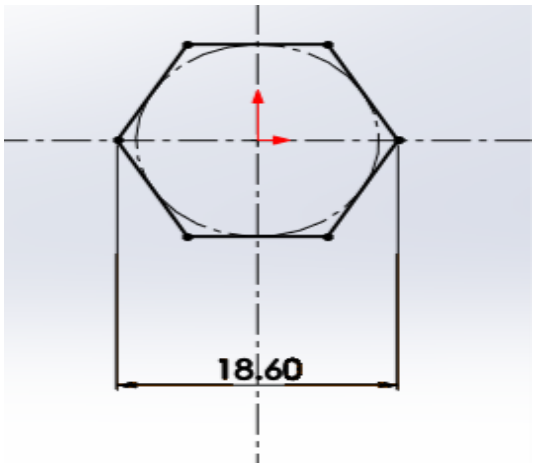

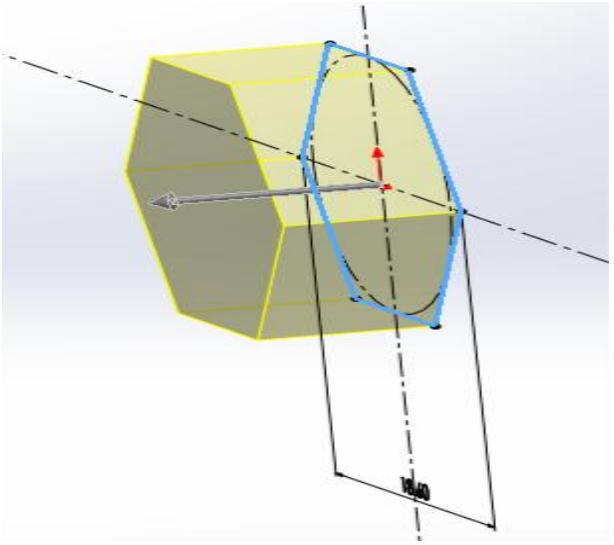

4. *Create circle of 2D sketch of Hexagonal width of 11.6 mm, on right plane and cut extrude to 7mm, (Select the face by (Enter Space bar> double click the Normal plane)*

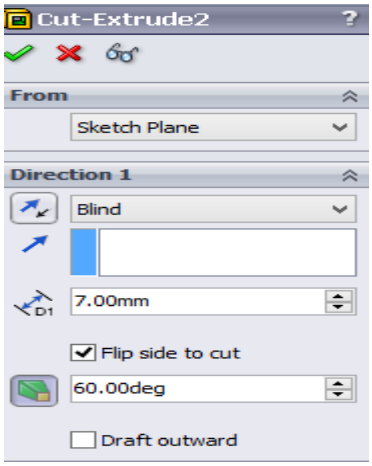

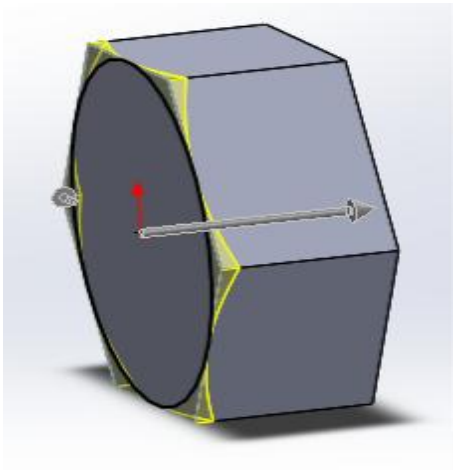

5. *reate circle of 2D sketch of Diameter of 11.6 mm, on right plane and extrudecut to 7mm taper 60º, flip side to cut, draft inward. (Select the face by (Enter Space bar> double click the Normal plane) and Draw the 2D sketch as given above.*
   Extrude cut by (Insert>Boss/Base>Extrude)) ok.

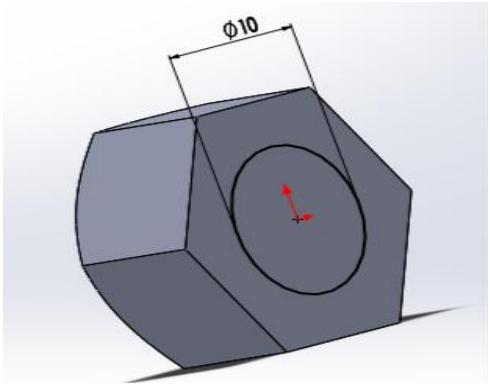

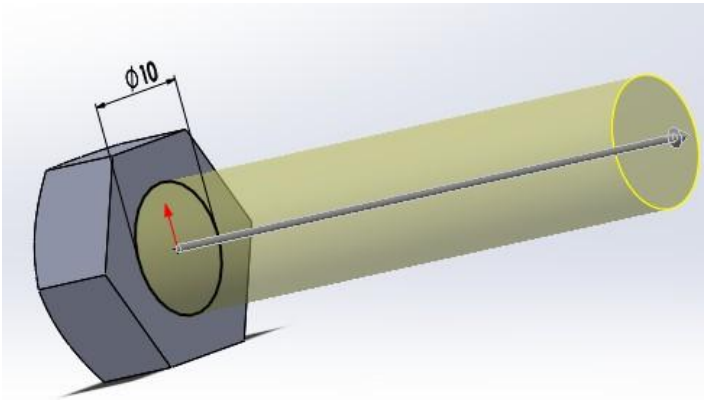

6. Create circle of 2D sketch of Diameter of 10 mm, on right plane and extrudeto 7mm (Enter Space bar> double click the Normal plane)

7. Create fillet and chamfer at corner of bolt at size of 1mm

8.Create external thread, Click Insert>Curve>Helix/Spiral
Press F to zoom fit, set Parameters Constant Pitch , Pitch suitabledimensions Revolutions 4 , Start angle 0.0deg.
Click Sketch , click Circle . Sketch circle at start point, then click Smartdimension.

set circle diameter to 1 mm.

9. *Take sweep (insert□boss/base □sweep) command and give Select profile and there relative circle, and Select path there relative curve,Options□orientation /twist type (select □along path),Define by□select turns □give the valve of 50 to100). □Ok done.*

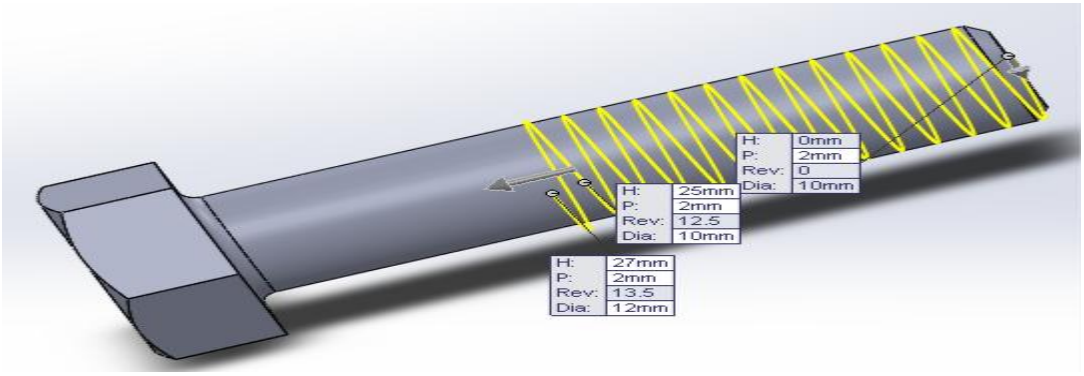

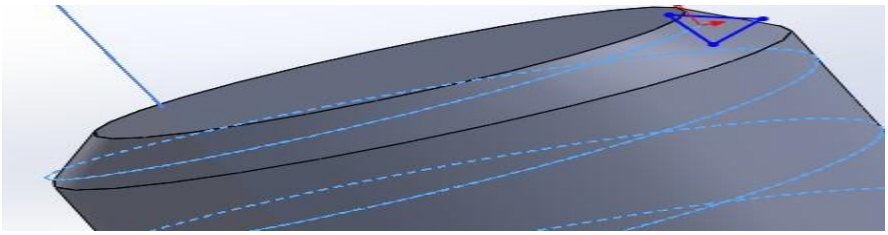

Similarly create Nut also as above said. Dimensions of nut as per bolt.

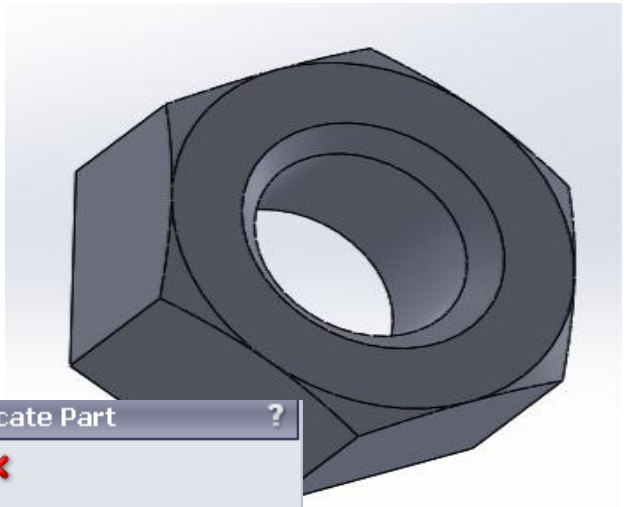

After create Nut part and save it.And open bolt file and select Select Insert> part> nut part>ok.

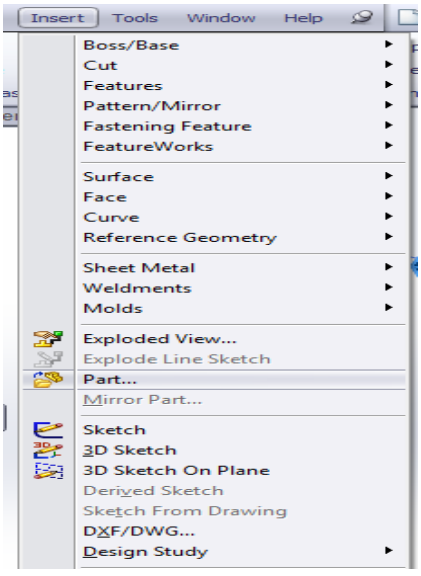

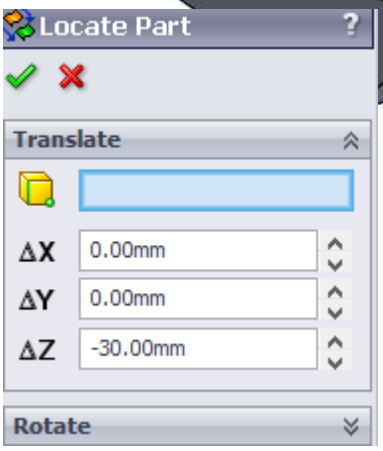

10. *Locate part with center of bolt.*

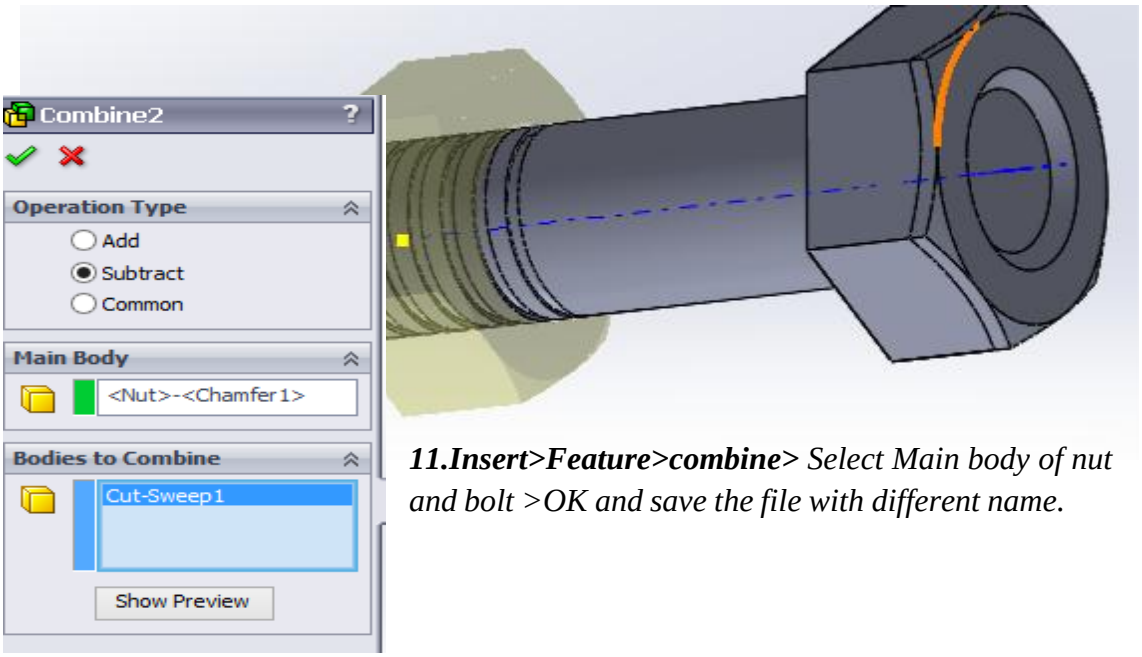

11.Insert>Feature>combine> *Select Main body of nut and bolt >OK and save the file with different name.*

Assembly: *Open new assembly file. Import bolt and nut file in assembly mode.*

12. *Mate the components using concentric Mate (select both bolt and nutthread faces).*

13. *Mate the components using screw Mate and select both faces of bolt and nut.*

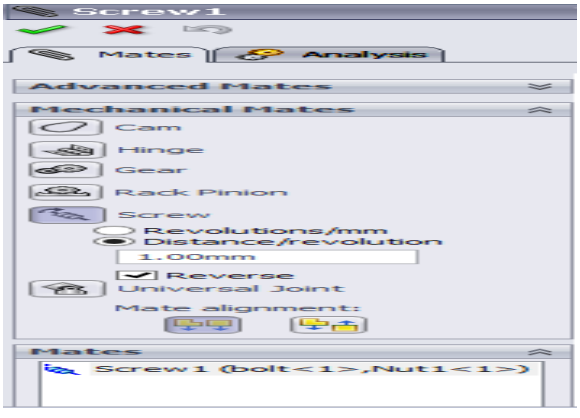

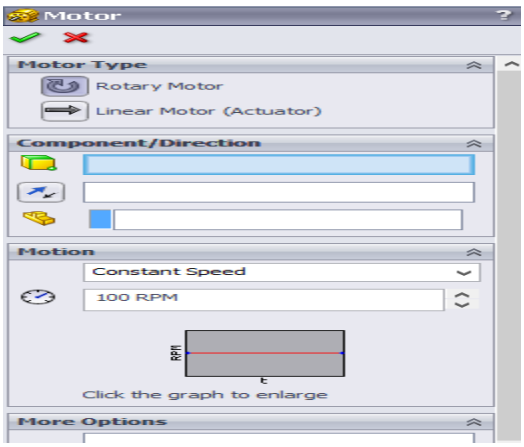

Animation: *open the motion study>switch of the orientation and camera views.*

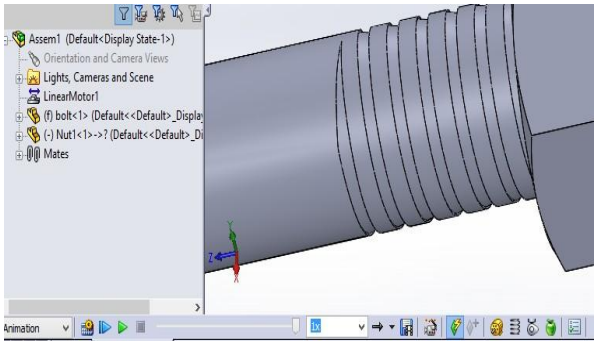

Start the motor> select the linear motor>motor location(select nutface) and component to move relative to(select bolt) ,motion at constant speed of 10mm/s>OK. Calculate and play.

2. Assembly of keys and cotter joints

Cotter joint: Draw 3D assembly component

Cotter joints are used to connect two rods, subjected to tensile or compressive forces along their axes.

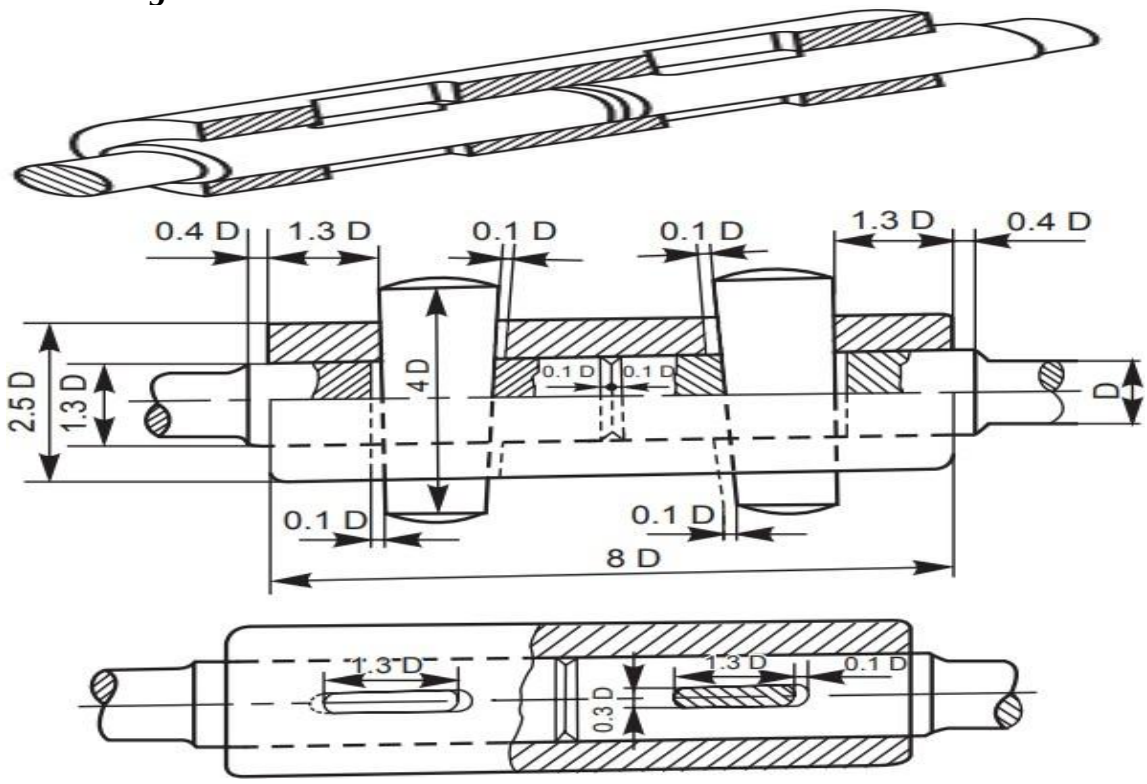

3. Riveted joints for plates:

In a lap joint, the plates to be riveted, overlap each other. The plates to be joined are first bevelled at the edges, to an angle of about 80° Depending upon the number of rows Riveted Joints of rivets used in the joint, lap joints are further classified as single rivetedlap joint, double riveted lap joint and so on.
were d=$6\sqrt{t}$ mm

Double riveted chain lap joint

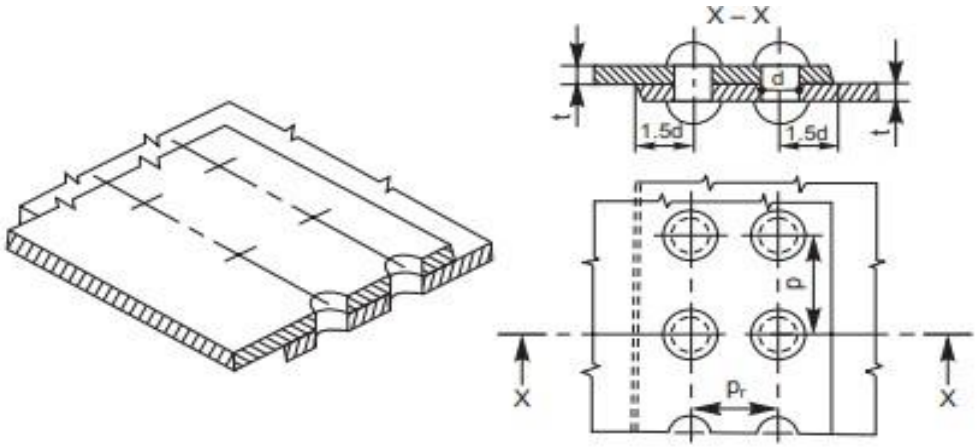

Double riveted chain lap joint

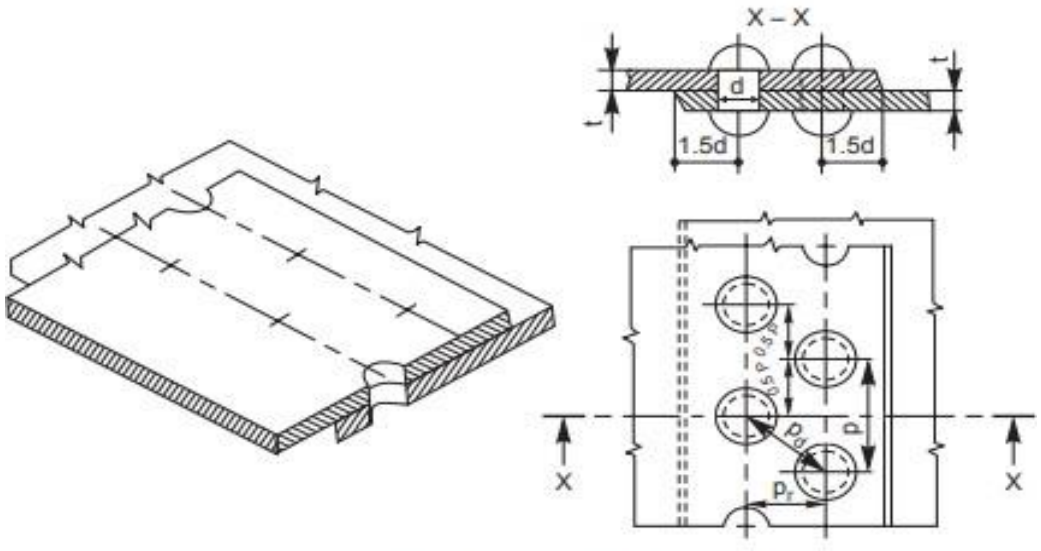

Double riveted zig-zag lap joint

4. Half lap muff coupling

In this, the ends of the shafts overlap each other for a short length. The taper provided in the overlap prevents the axial movement of the shafts. Here too, after placing the muff over the overlapping ends of the shafts, a saddle key(s) is(are) used to make the coupling

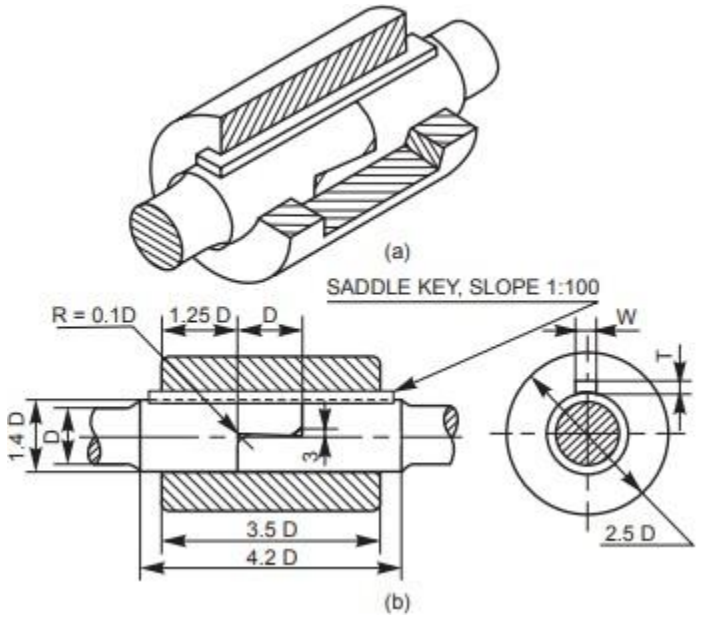

5. DETAILS AND ASSEMBLY OF STUFFING BOX USING SOLIDWORKSSOFTWARE

AIM:

To draw the detail view of the Stuffing Box and assemble the parts by using theSolidworks software and obtain its respective views.

COMMANDS USED: *Sketch, extrude , Shaft, Pattern, Mate, Align, Helical Sweep, Round, Chamfer etc,*

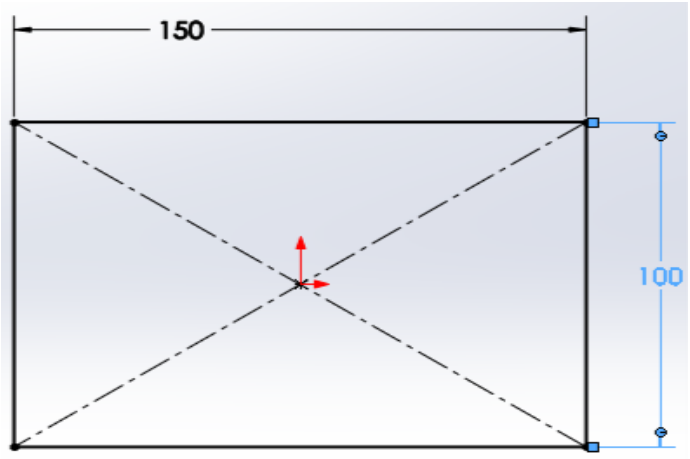

1. Create a 2D sketch on Front Plane as shown in the figure.

2.(Right click the Front plane>insert sketch and draw the2D sketch).

Note: All the 2D sketches drawn should be fully Defined and there should not be any under defined)and use (click Add Relation andSmart Dimensions.

3. extrude to 15 mm (Select the face by (Enter Space bar> double click theplane) and Draw the 2D sketch as given above

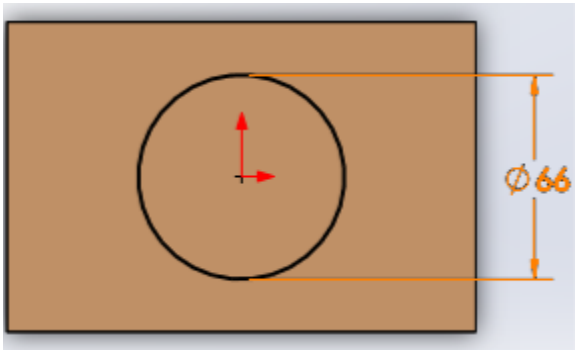

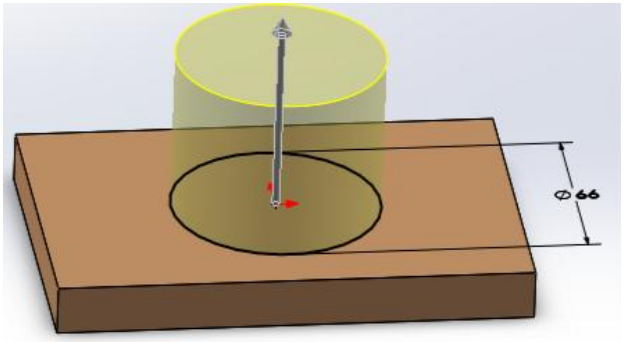

4. extrude to 50 mm (Select the face by (Enter Space bar> double click the plane) andDraw the 2D sketch as given above

Inner diameter 34 mm size and use extrude cut and remove material up to end ofblock as shown below.

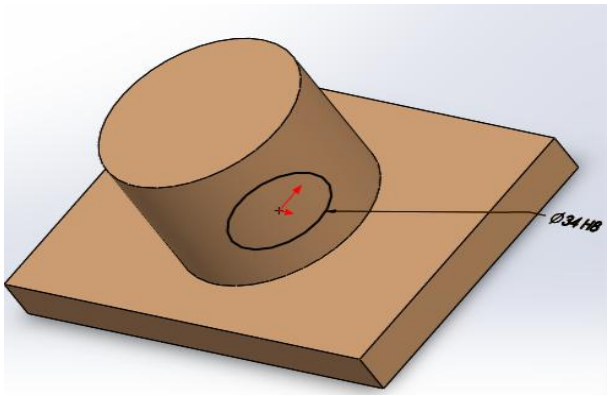

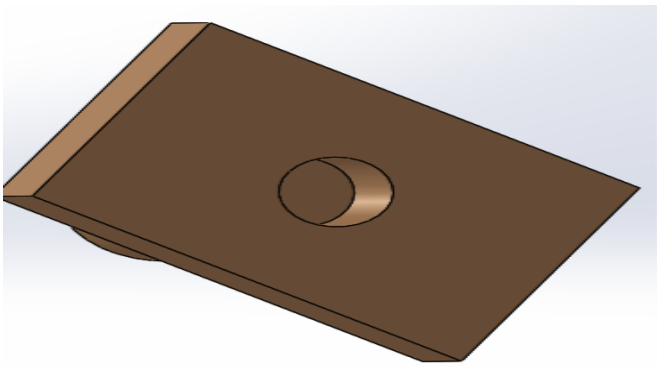

5. Create a 2D sketch on Front Plane as shown in the figure. (Right click the Front plane>insert sketch and draw the 2D sketch).

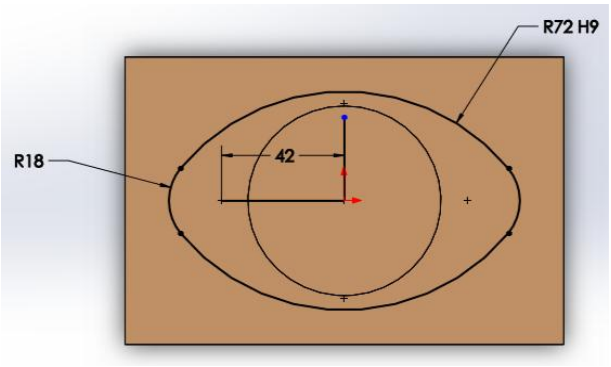

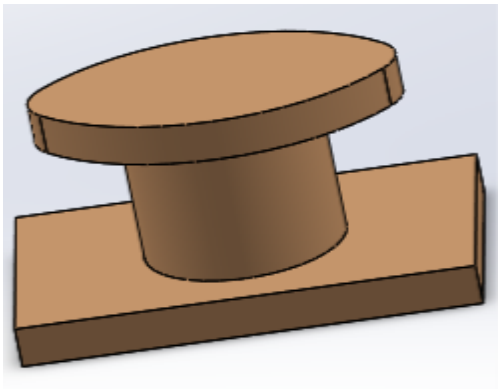

extrude to 15 mm (Select the face by (Enter Space bar> double click the plane) and Draw the 2D sketch as given above

1. Use Extrude cut with dimensions of 42 mm size circle as per below figure.

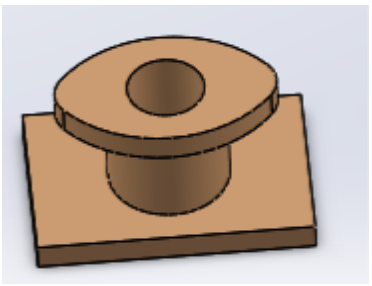

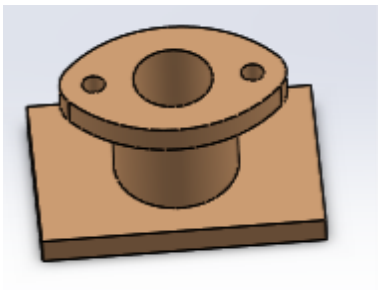

Create a hole as per the dimensions of 12mm size both sides.

6. Create a 2D sketch on Front Plane as shown in the figure.

(Right click the Front plane>insert sketch and draw the 2D sketch).

Extrude cut to 51 mm (Select the face by (Enter Space bar> double click the plane)and Draw the 2D sketch as given above

7. *Create thread,Take sweep (insert□boss/base □sweep) command and giveSelect profile and there relative circle, and Select path there relative curve,Options□orientation /twist type (select □along path),Define by□selectturns □give the valve of 50 to 100). □Ok done. And mirror it.*

II Gland: *6.Create a 2D sketch on Front Plane as shown in the figure.(Right*

click the Front plane>insert sketch and draw the 2D sketch).

Extrude to 12 mm and 10mm (Select the face by (Enter Space bar> double click theplane) and Draw the 2D sketch as given above

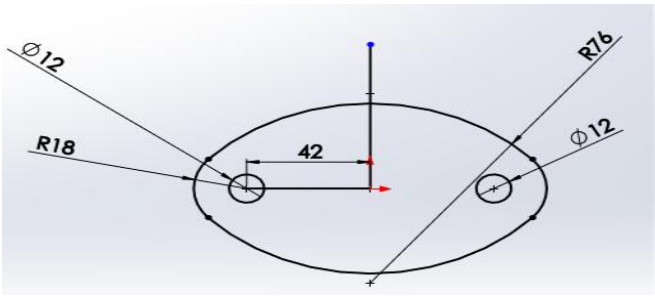

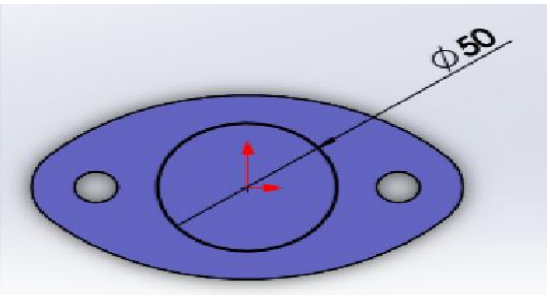

xtrude to 45 mm (Select the face by (Enter Space bar> double click the plane) and Draw the 2D sketch as given above, Extrude cut use through all.(Select the face by (Enter Space bar> double click the plane) and Draw the 2D sketch as given below,

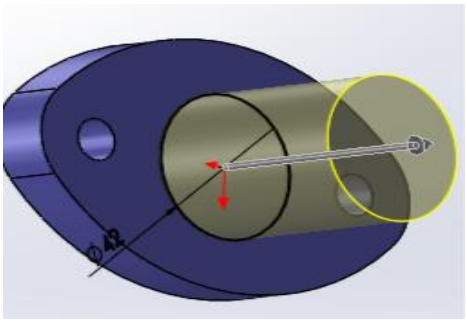

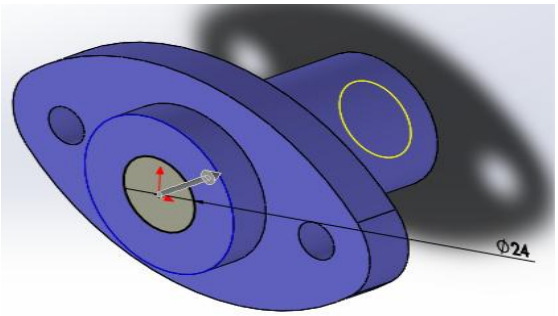

7.Create a 2D sketch on Front Plane as shown in the figure.

(Right click the Front plane>insert sketch and draw the 2D sketch).

Revolve, the sketch to 360 degree on top sketched line, by (Insert> Boss/Base>Revolve)

ok. As per given below figure.

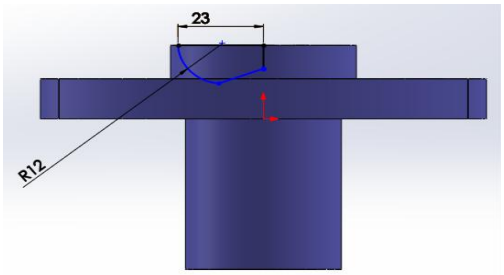

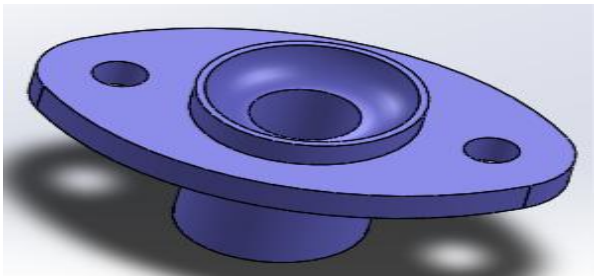

Below figures use as per the dimensions

III ***Neck bush:*** ***IV M12 Nut***

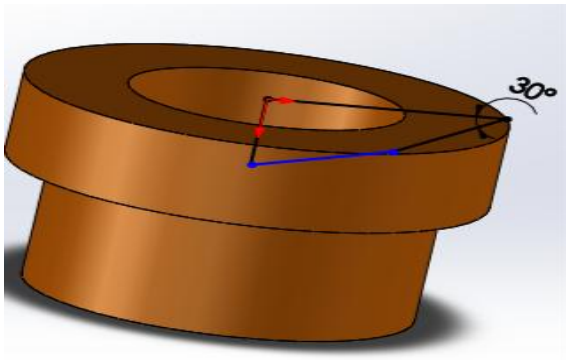

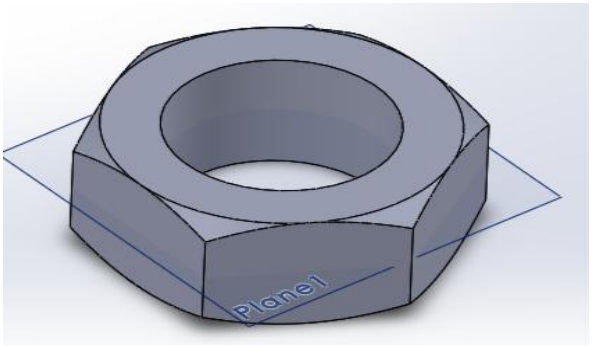

V.Stud

Assembly model as per the dimensions:

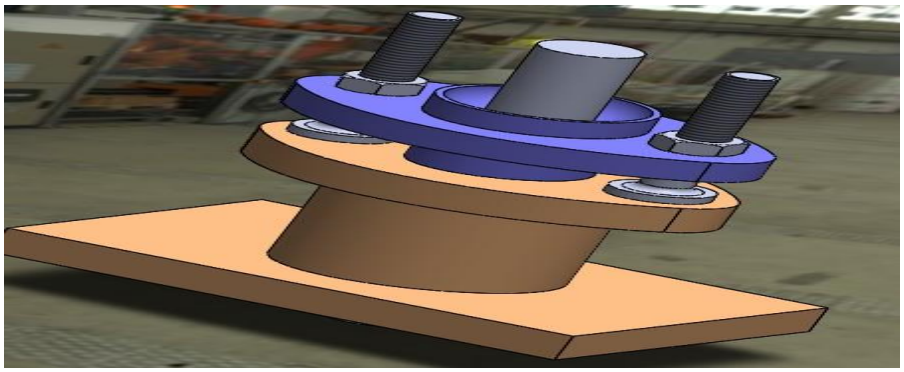

PROCEDURE: PART DRAWING:

CYLINDER: ☐Using Pad, Cut and Round Commands the cylinder has been drawn.NUT: ☐Using extrude, Cut and Round Commands the nut has been drawn.
GLAND BUSH: ☐Using extrude and Cut Commands the gland bush has been drawn.PISTON ROD: ☐Using extrude and Cut Commands the piston rod has been drawn. PACKING: ☐Using Shaft command the packing has been drawn.

ASSEMBLY AND DETAILED DRAWING: ☐

Using the Assembly and Drawing mode to make the respective views and bill ofmaterials.

RESULT:

Thus the Detail View of the Stuffing Box and then its respective views have beendrawn

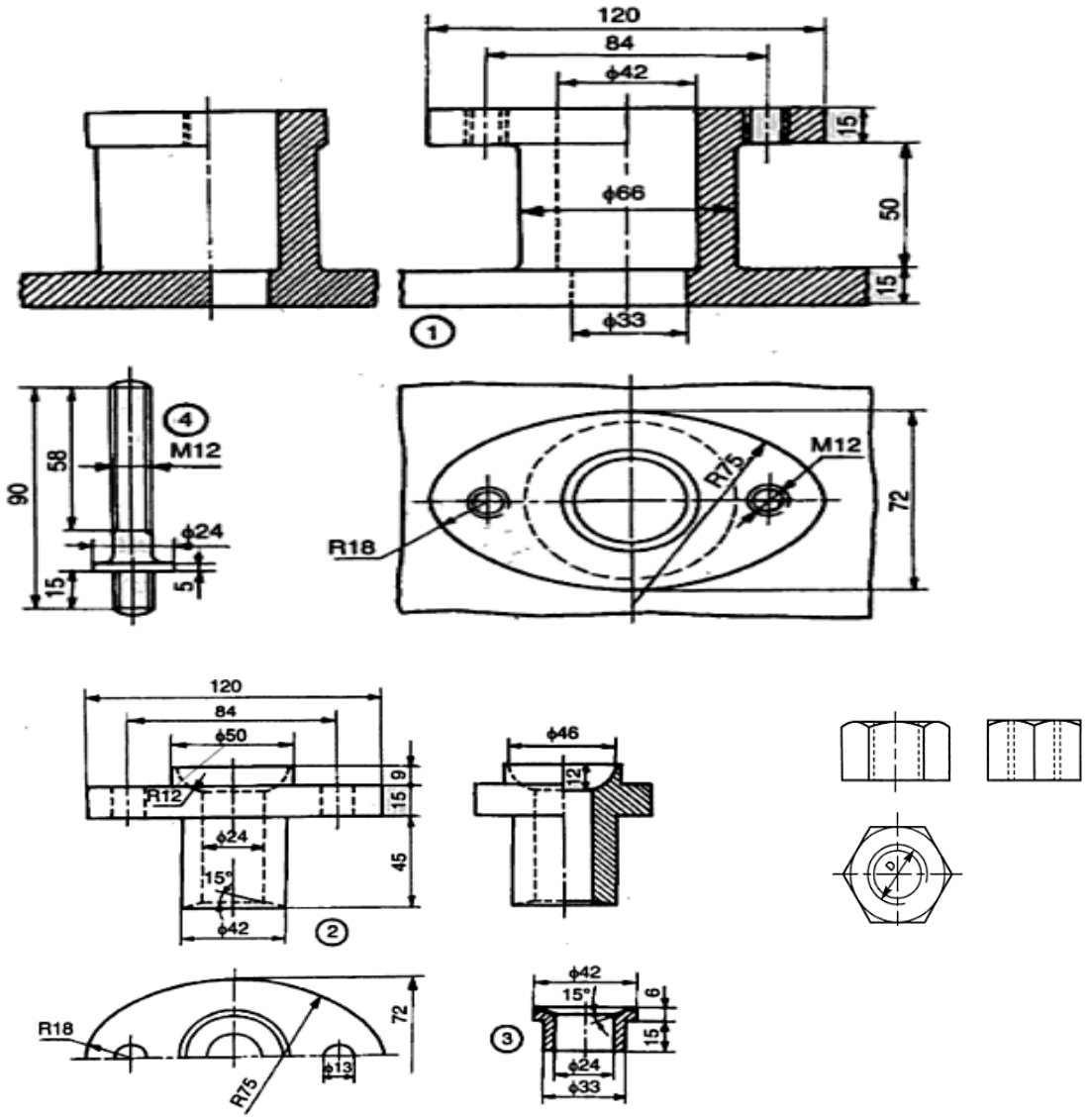

Parts list

Part No.	Name	Matl	Qty
1	Body	CI	1
2	Gland	Brass	1
3	Bush	Brass	1
4	Stud	MS	2
5	Nut, M12	MS	2

6.Details and assembly of Eccentric using solidworks software

AIM:

To model and assemble the Eccentric as per the dimensions given and also convertthe 3D models into different views with Bill of materials.

Tools: *Personal computer with Pentium IV processor with windows xp/windows-7 and solidworks software, Sketch, extrude , Shaft, Pattern, Mate, Align, Helical Sweep,Round, Chamfer etc,*

1.Strap:

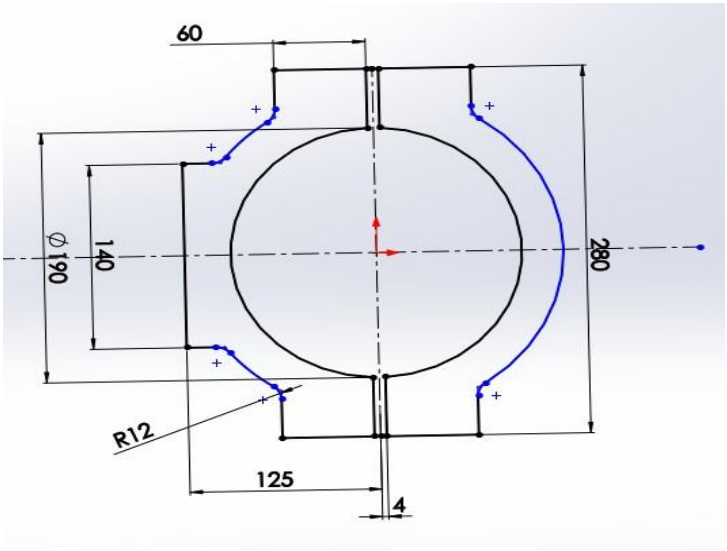

Draw the 2D sketch as given above
Extrude by (Insert>Boss/Base>Extrude)) ok.

1.Create a 2D sketch on Front Plane as shown in the figure.

2.(Right click the Front plane>insert sketch and drawthe 2D sketch).

Note: All the 2D sketches drawn should be fully Defined and there should not be any under defined) and use (click Add Relation and Smart Dimensions.

3. extrude to 45 mm (Select the face by (Enter Space bar> double click the Mid plane) and

4. select right plane and draw the 2D Sketch circles for hole both ends sides.

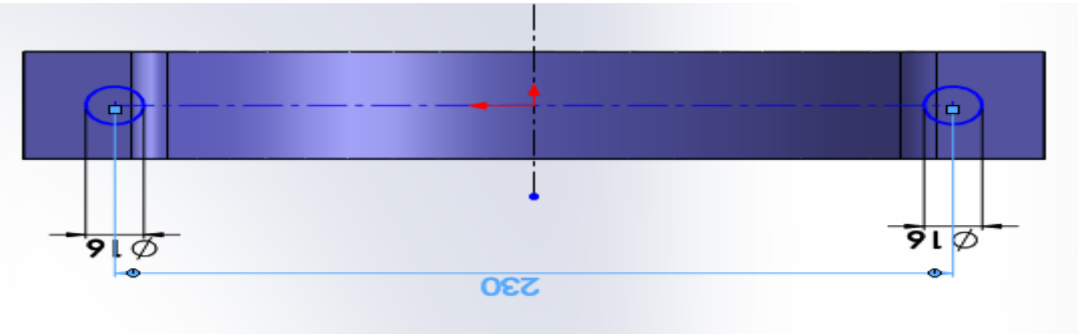

6. Create tapped hole M16X1.5mm one end side Insert>features>hole>wizard

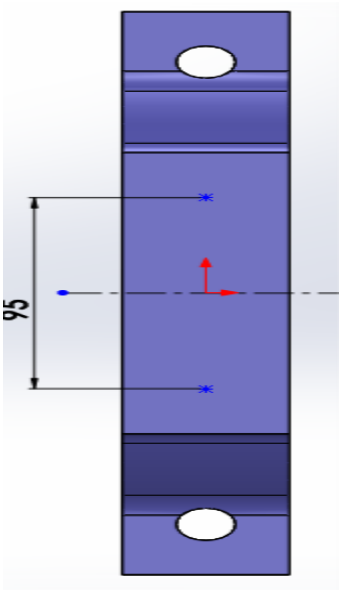

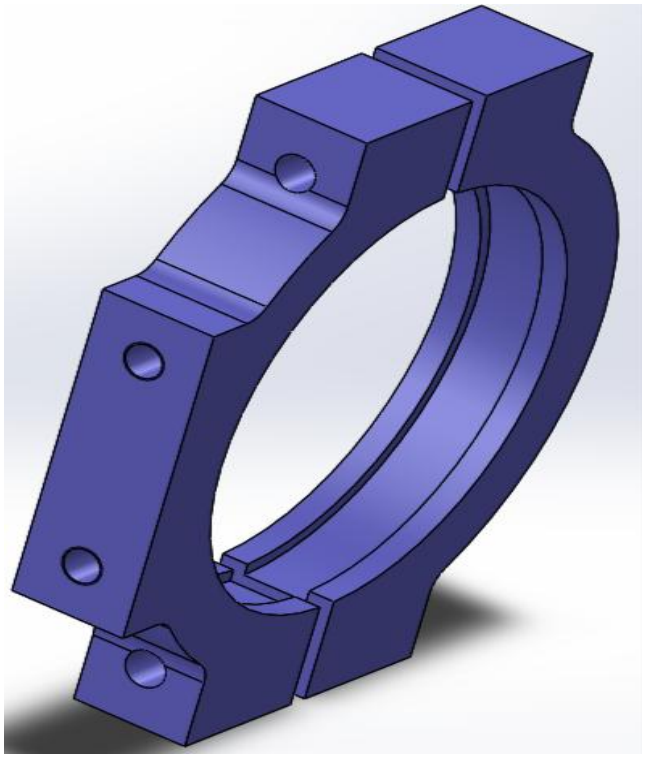

7. *Create a 2D sketch on Front Plane as shown in the figure. (Right click the Front plane>insert sketch and draw the 2D sketch).*

Circle of 200 mm diameter and use cut extrude(select mid plane 25 mm.

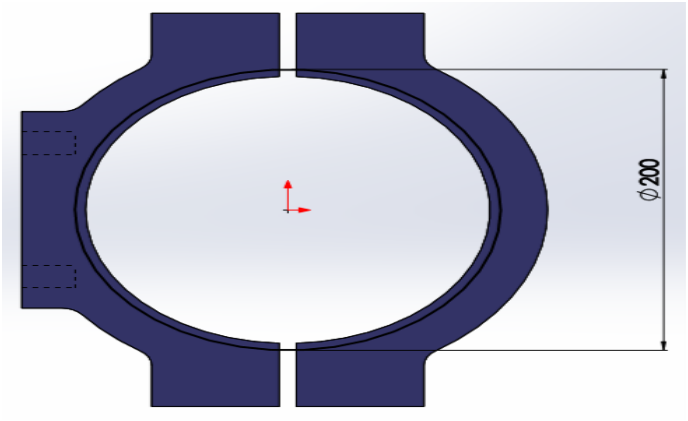

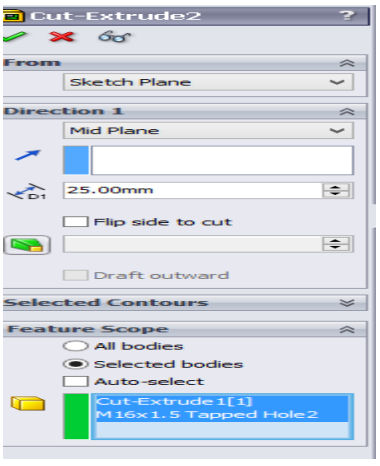

2. Sheave: Step.1 *1.Create a 2D sketch on Front Plane as shown in the figure.*

2.(Right click the Front plane>insert sketch and draw the 2D sketch).

Note: All the 2D sketches drawn should be fully Defined and there should notbe any under defined) and use (click Add Relation and Smart Dimensions.

Revolve, the sketch to 360 degree on top sketched line, by (Insert> Boss/Base>Revolve)

ok.

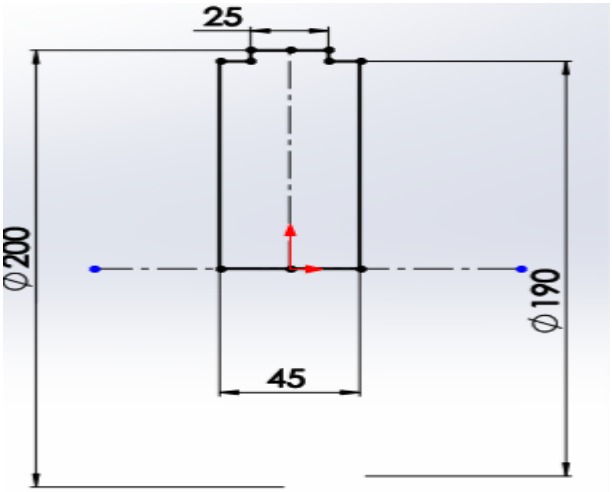

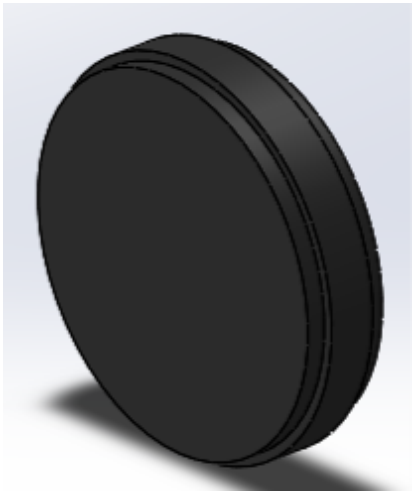

Create circle of 2D sketch as per the dimensions, on right plane and extrude to 20mm (Select the face by (Enter Space bar> double click the Normal plane) and Draw the 2D sketch as given above. Extrude by

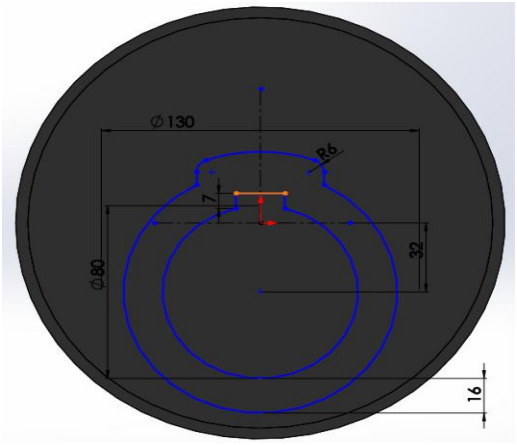

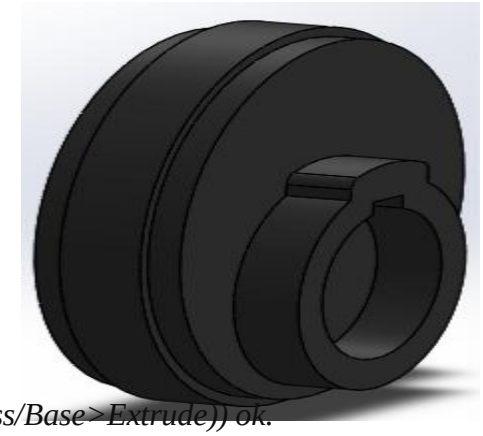

(Insert>Boss/Base>Extrude)) ok.

And select inner sketch use extrude cut through all.

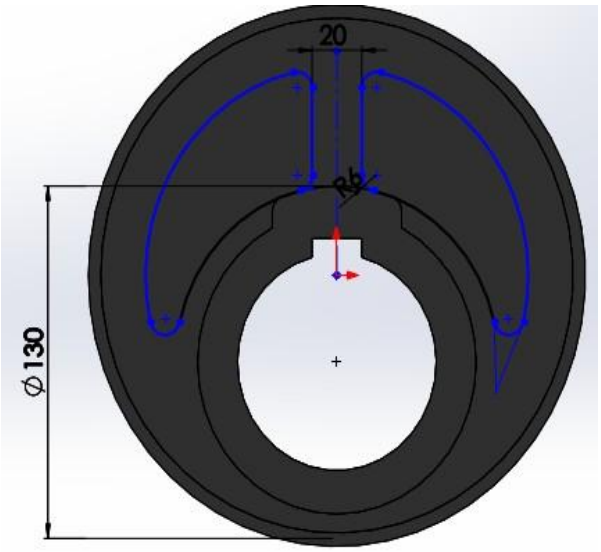

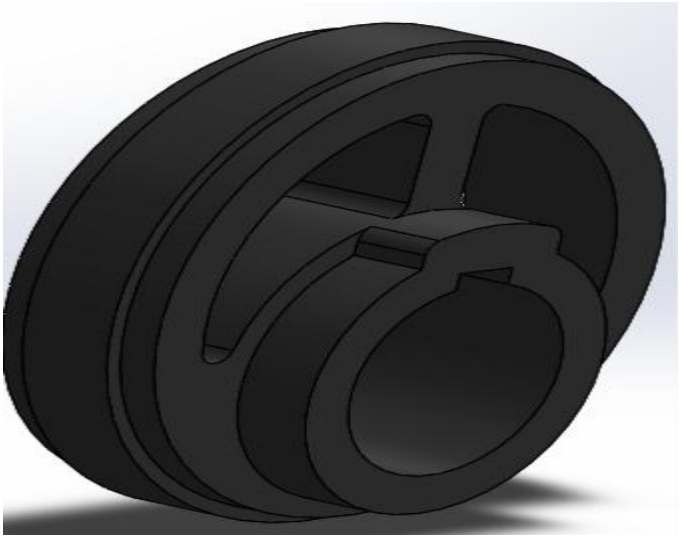

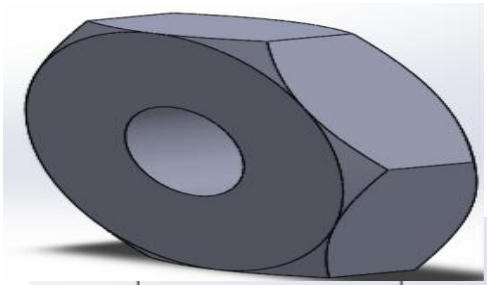

3. Hexaganal Nuts as per the dimensions as perabove first experiment.

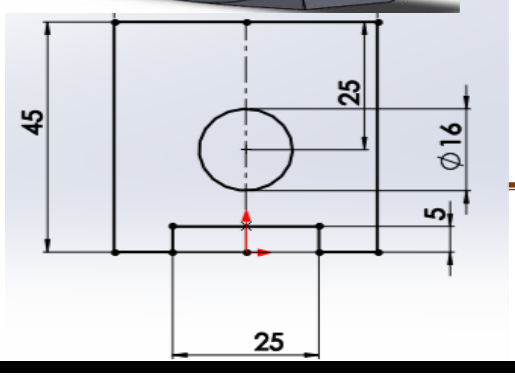

4. Packing strap as per the dimensions. andextrude 8 mm.

5. ***Rod:***

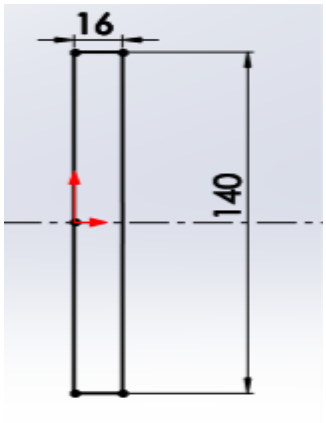

Use extrude option and select mid plane 30mm.

Use extrude option and select mid plane 20mm

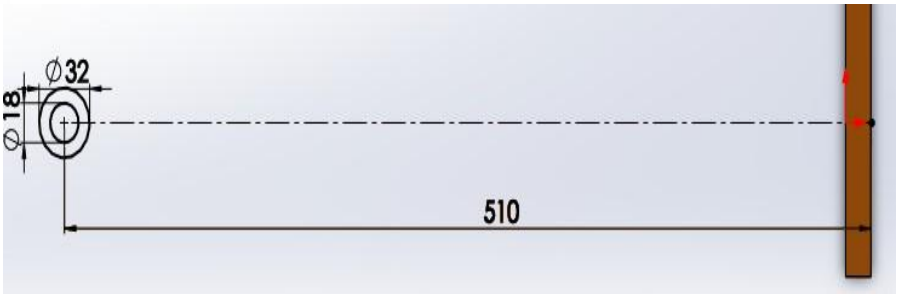

Use extrude option and select mid plane 12mm and center hole of 17mm ,distanceof holes 95 mm size.

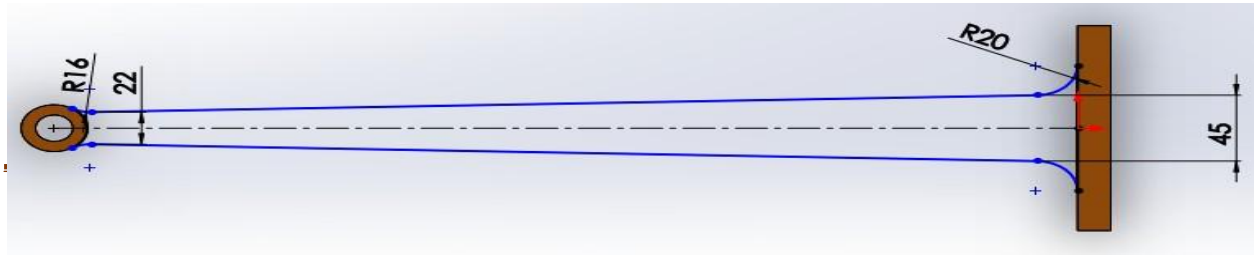

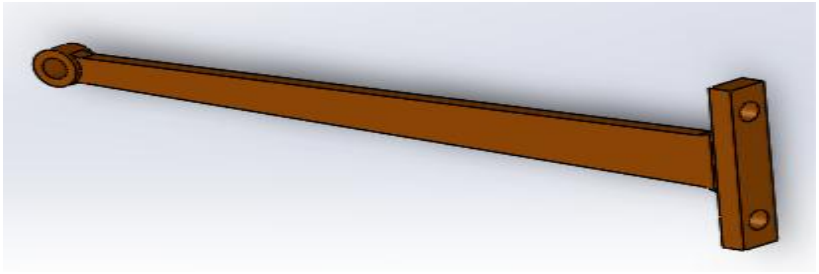

6. ***Bolt: Create bolt as per the dimensions:***
7. ***Stud as per the dimensions:***

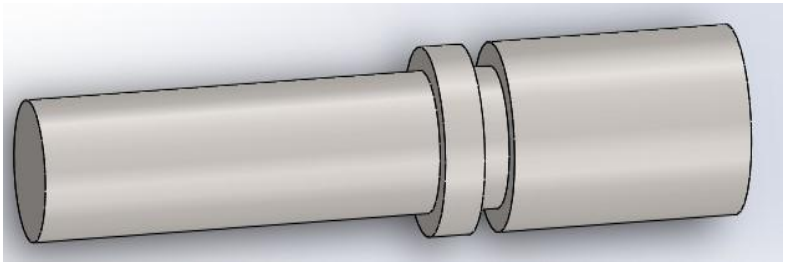

Assembly: Insert the components.

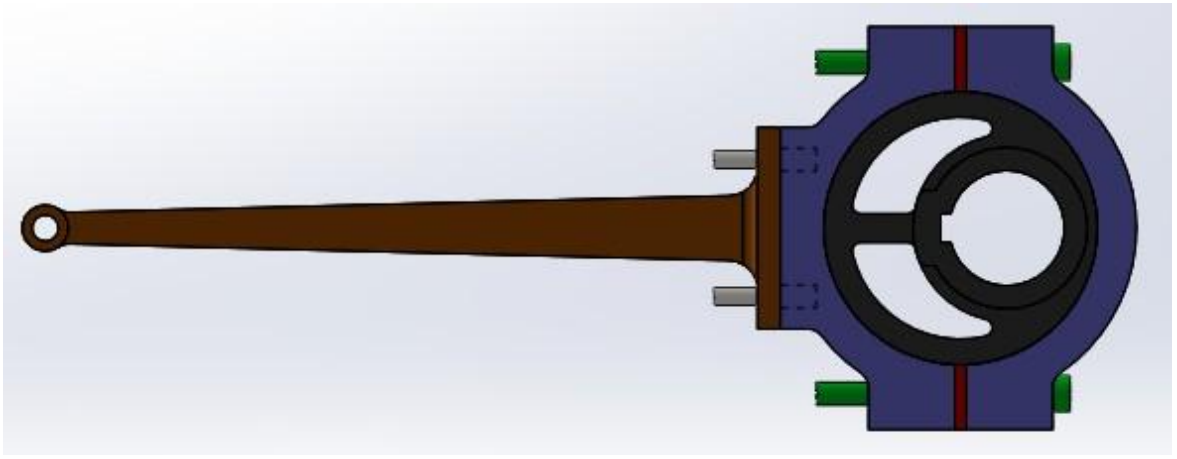

Procedure:

1. Model different parts of a eccentric using Extrude, Revolve and features.
2. Select the assembly in solid works main menu.
3. Using Insert component icon of property manager, insert base component & next components to be assemble.
4. Assemble using MATE Feature.
5. Continue the inserting the component & mating until the entire component are

assembled.

6. Save the assembly.

7. From the main menu of solid works select the drawing option.

8. Drawing icon in main menu of Solid works

9. Select the drawing sheet format size as – A4 Landscape.

10. Using the model view manager browse the document to be open.

11. Click the view orientation from the model view manager & place the drawing viewin the proper place in the sheet.

12. Using the placed view as parent view project the other or needed views

13. Move cursor to any one view and right click the mouse button.

14. Select the Table – BOM.

15. Place the BOM in the proper place in the drawing sheet.

16. Save the drawing sheet.

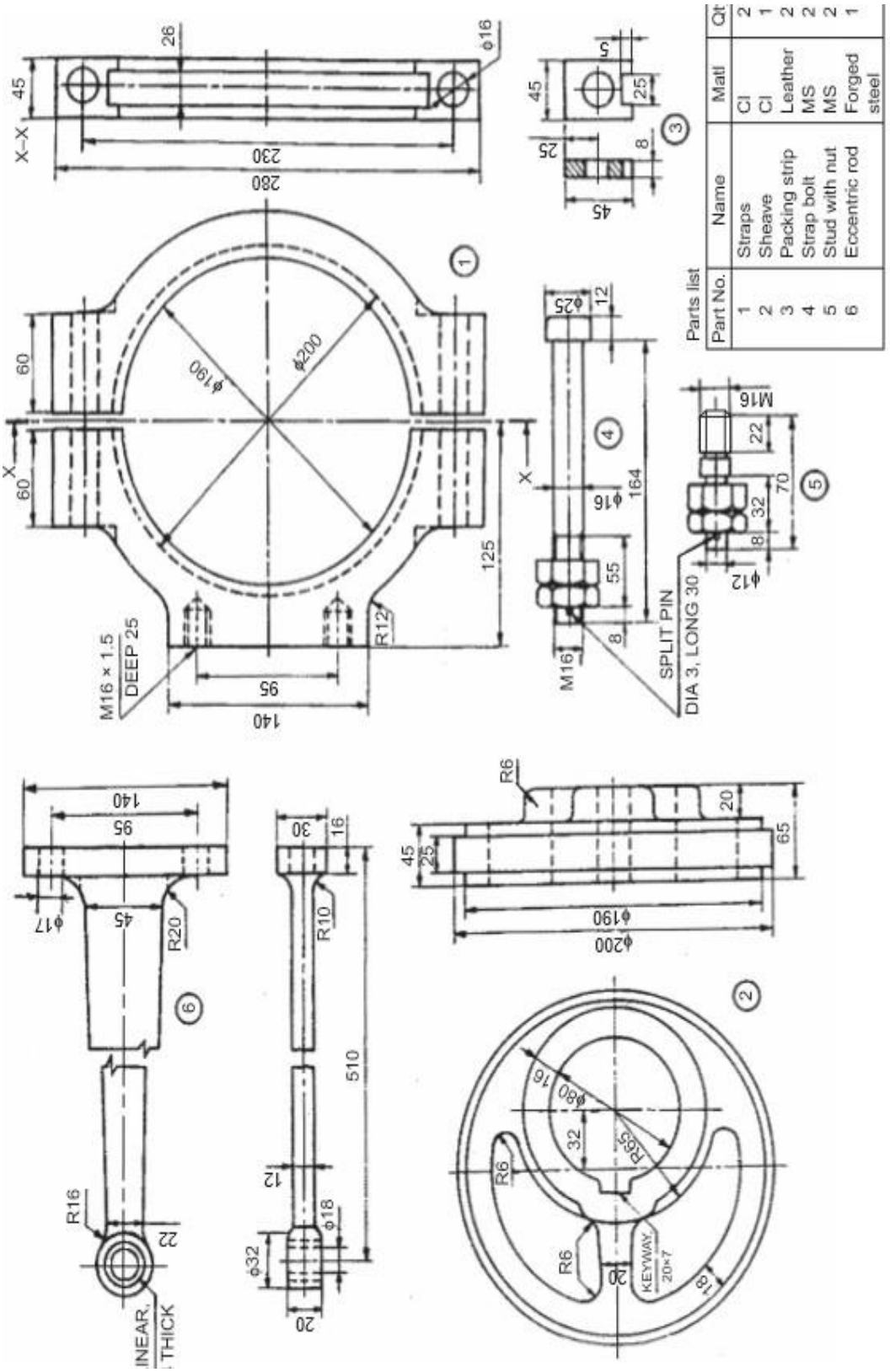

Fig. 18.8b Details of an eccentric

7. DETAILS AND ASSEMBLY OF SCREW JACK USING SOLIDWORKS SOFTWARE

AIM:

To model and assemble the Screw jack as per the dimensions given and alsoconvert the 3D model into different views with Bill of materials.

Tools: *Personal computer with Pentium IV processor with windows xp/windows-7 and solid works software, Sketch, extrude , Shaft, Pattern, Mate, Align, Helical Sweep,Round, Chamfer etc,*

Description about Screw jack:

A Screw Jack, manually operated is a contrivance to lift heavy object over a small height with a distinct Mechanical Advantages. It also serves as a supporting aid in the raised position. A screw Jack is actuated by a square threaded screw worked by applying a moderate effort at the end of a Tommy bar inserted into the hole of the head of the screw. The body of the screw jack has an enlarged circular base which provides a large bearing area. A gun metal nut is tight fitted into the body at the top. A screw spindle is screwed through the nut. A load bearing cup is mounted at the top of the screw spindle and secured to it by a washer and a CSK screw. When the screw spindle is rotated, the load bearing cup moves only up or down along with the screw spindle but will not rotate with it. The Tommy bar is inserted into the hole in the head of the screw spindle only during working and will be detached when not in use.

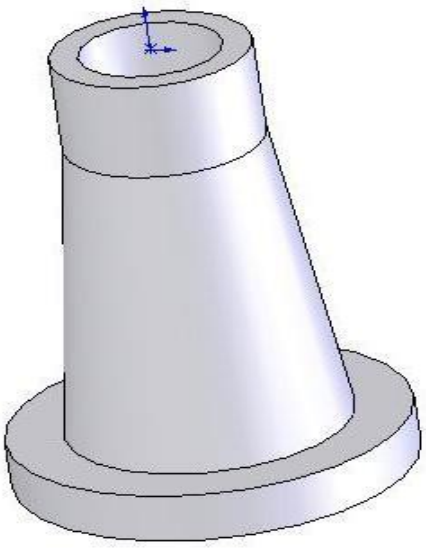

1. Body Use revolve feature

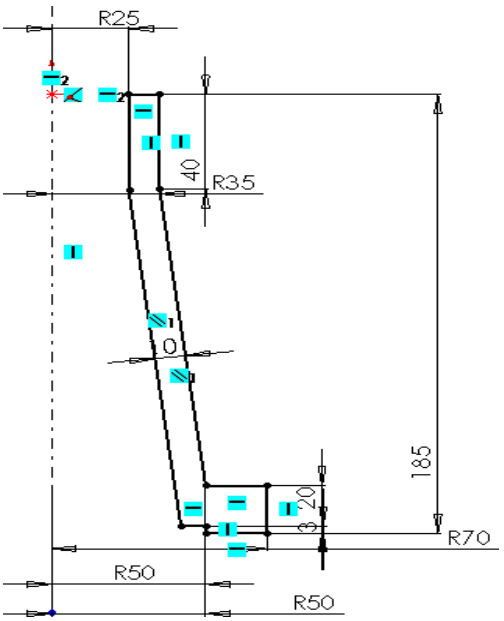

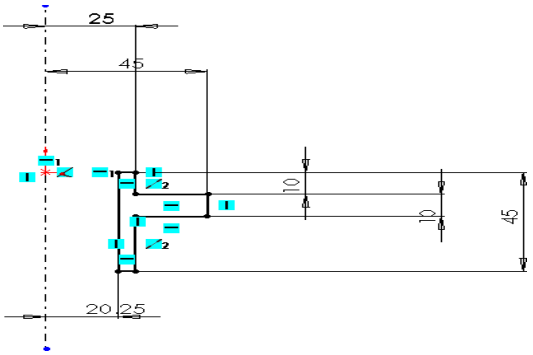

2. Nut Use Revolve , fillet feature,cut sweep

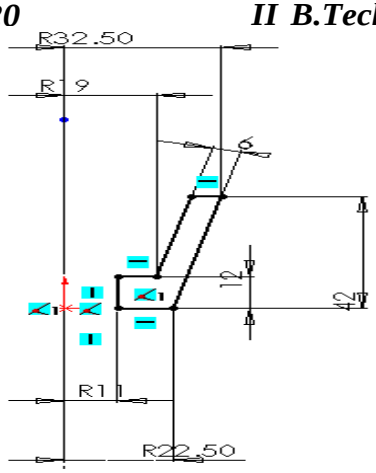

4.Cup Use Revolve

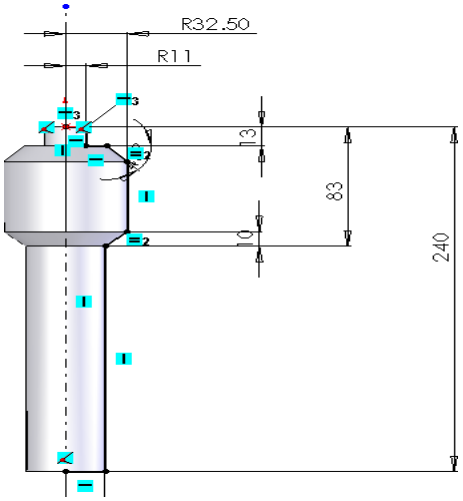

3. Screw use Revolve, Thread feature.

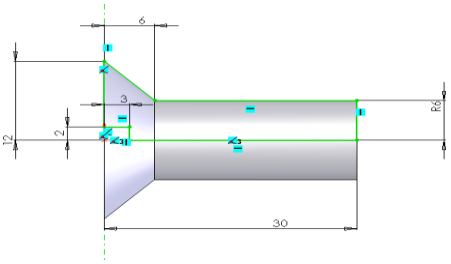

6. Screw use Revolve

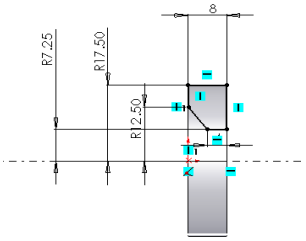

5. Washer use Revolve feature.

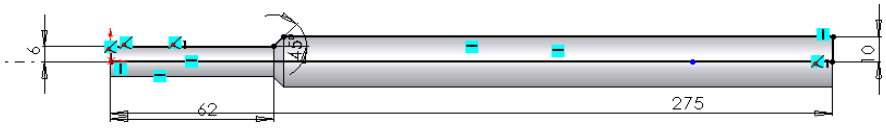

7. Tommy bar ***Tommy bar use Revolve feature.***

Procedure:

1. Model different parts of a Screw Jack using Extrude, Revolve and features.
2. Select the assembly in solid works main menu.
3. Using Insert component icon of property manager, insert base component & next components to be assemble.
4. Assemble using MATE Feature.
5. Continue the inserting the component & mating until the entire component are assembled.
6. Save the assembly.
7. From the main menu of solid works select the drawing option.
8. Drawing icon in main menu of Solid works
9. Select the drawing sheet format size as – A4 Landscape.
10. Using the model view manager browse the document to be open.
11. Click the view orientation from the model view manager & place the drawing viewin the proper place in the sheet.
12. Using the placed view as parent view project the other or needed views
13. Move cursor to any one view and right click the mouse button.
14. Select the Table – BOM.
15. Place the BOM in the proper place in the drawing sheet.
16. Save the drawing sheet.

Result:
Thus the given Screw Jack is modeled; assembled & different views are taken

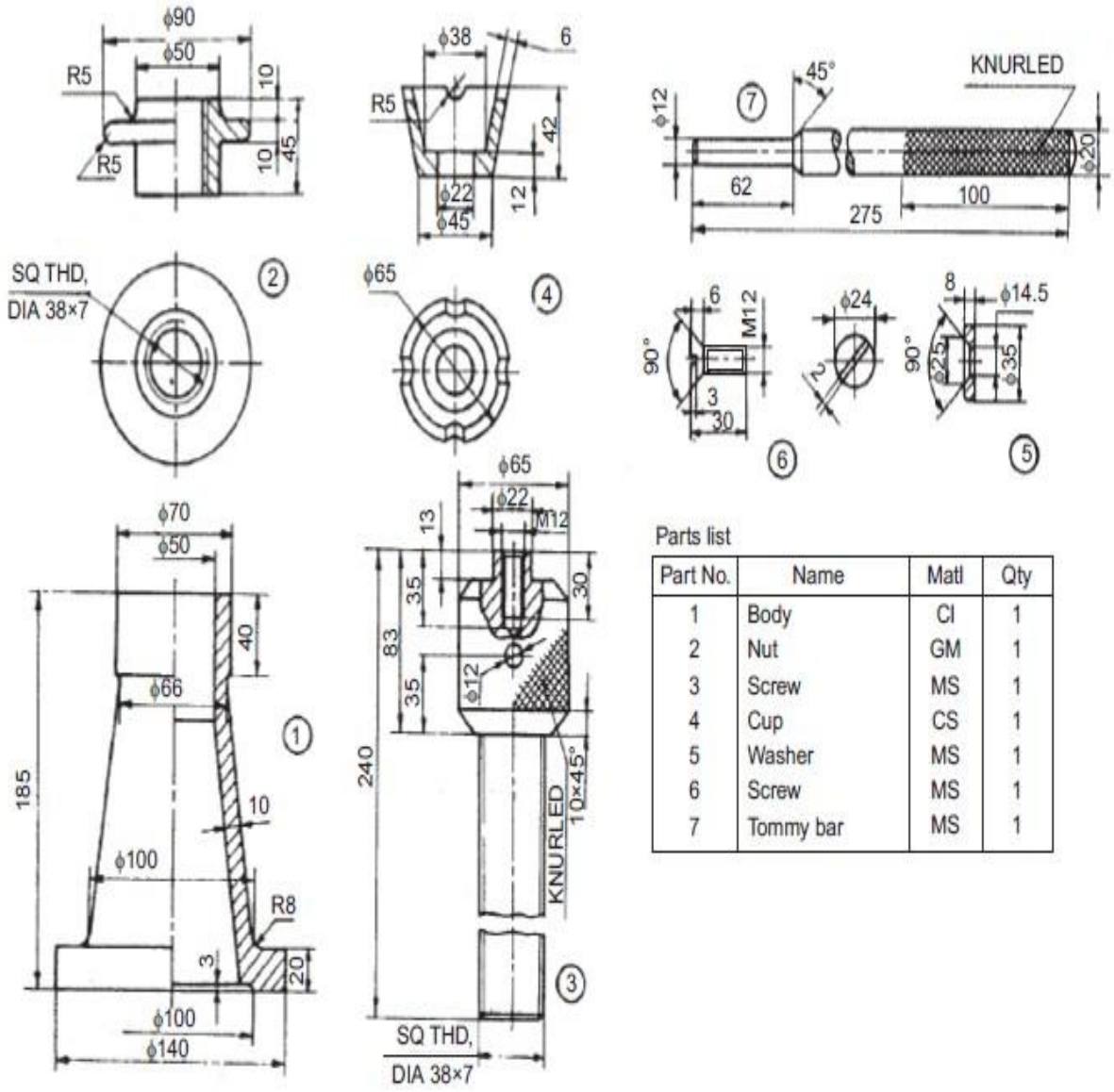

Parts list

Part No.	Name	Matl	Qty
1	Body	CI	1
2	Nut	GM	1
3	Screw	MS	1
4	Cup	CS	1
5	Washer	MS	1
6	Screw	MS	1
7	Tommy bar	MS	1

8. Draw and assembled Plummer block components with shuitable dimentions

This bearing is used for long shafts, requiring intermediate support, especially whenthe shaft cannot be introduced into the bearing, end-wise.

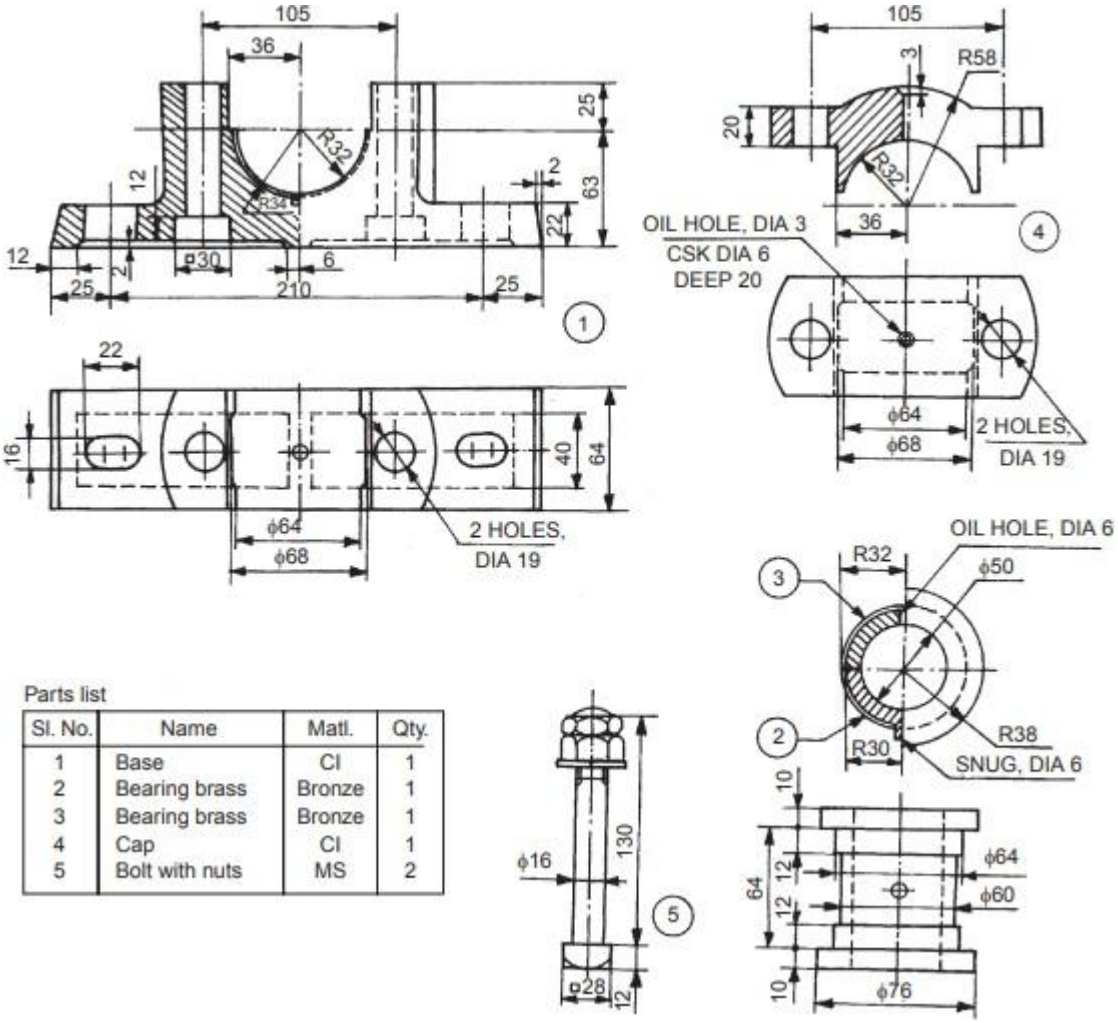

Parts list

Sl. No.	Name	Matl.	Qty.
1	Base	CI	1
2	Bearing brass	Bronze	1
3	Bearing brass	Bronze	1
4	Cap	CI	1
5	Bolt with nuts	MS	2

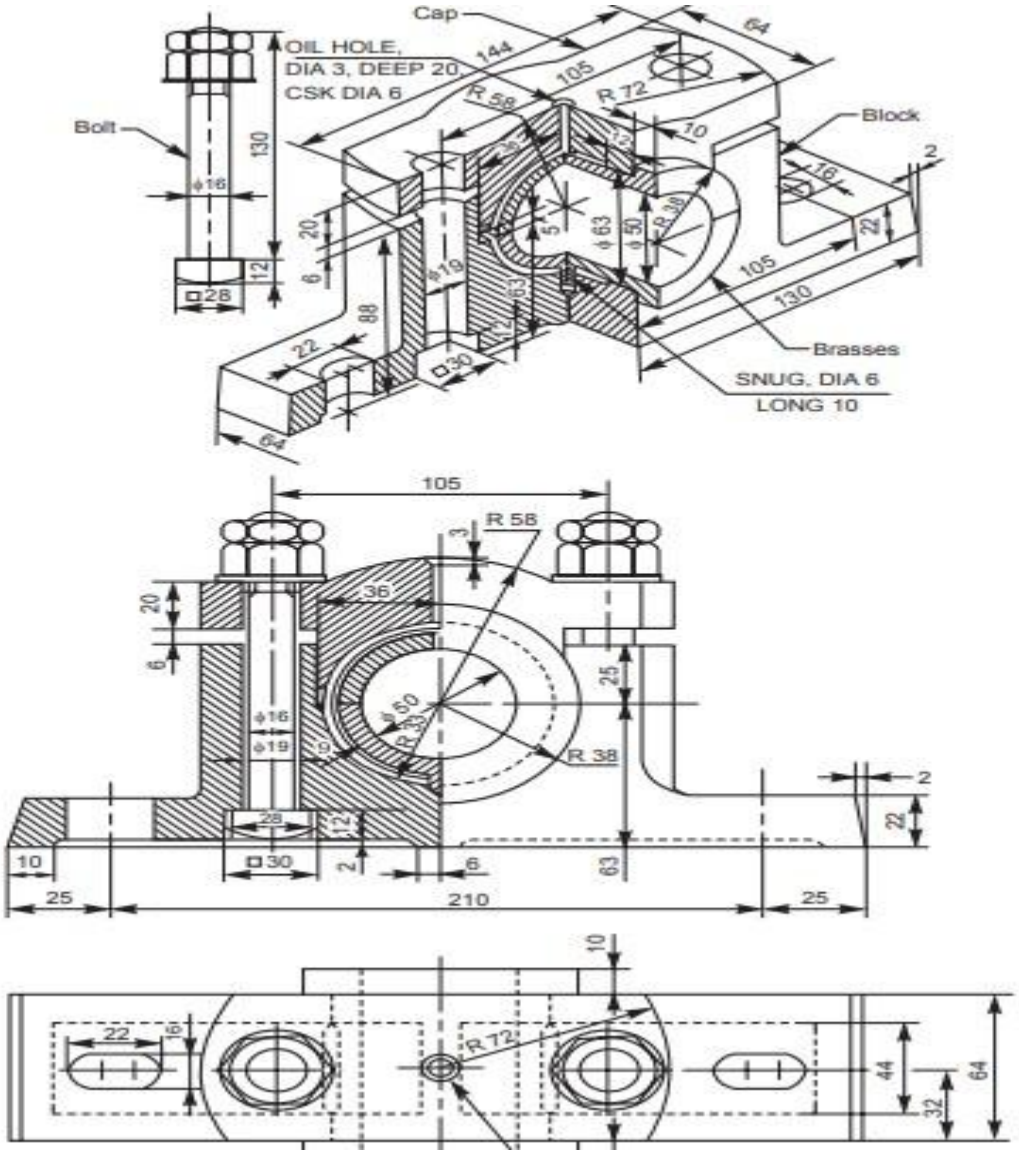
Cap
OIL HOLE,
DIA 3, DEEP 20,
CSK DIA 6
Bolt
Block
Brasses
SNUG, DIA 6
LONG 10
R 58
R 72
R 38
R 33
105
144
64
130
210
25
22
44
32

9. DETAILS AND MODELING OF TAIL STOCK USING SOLIDWORK

AIM: *To model the parts of a tail stock by creating modifying and manipulating various features and assemble them to create an assembled model using a featuresolid modelling and detailing.*
COMMANDS USED: *Sketch, extrude , Shaft, Pattern, Mate, Align, Helical Sweep, Round, Chamfer etc,*

PROCEDURE STEPS:

- *The drawing with required dimensions are thoroughly observed.*
- *The tail stock body is first created by using protrusion lofted protrusion commands.*
- *The cutouts for barrels, clamping nuts lock nut inserts screw spindleare made on the body using cutout sweep cutout command.*
- *The screw spindle is created by protrusion helical cutout commands including in screw thread.*
- *The clamping plate, clamping plate, clamping bolt, spindle bearing, washers, nuts are created by using protrusion cutout helical cutout commands.*
- *The tail stoke center is created by using protrusion and lofted protrusion as per taper dimensions provided the hand wheel model is created by protrusion revolved protrusion cutout commands and saved.*
- *An assembly file is opened and the parts are imported into the file foran assembly.*
- *As tailstock body, the base part, the barrel screw, spindle, lamp plate, spindle bearing ,tailstock centre, hand wheel are assembled by assigning various relationship. options like Make axial align plane alignInsert convert*
- *Thus the assembled model of tailstock is created and the parts,modelsare drafted with dimensions in a draft file and saved.*

I.Body:

Create a 2D sketch on Front Plane as shown in the figure. (Right click the Front plane>insert sketch and draw the 2D sketch).

Extrude to 25 mm,20mm (Select the face by (Enter Space bar> double click the plane)and Draw the 2D sketch as given above

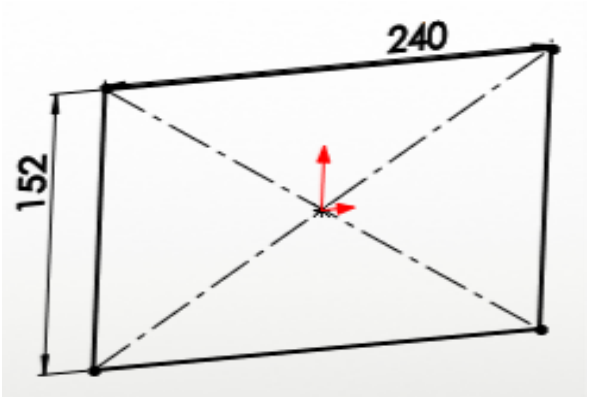

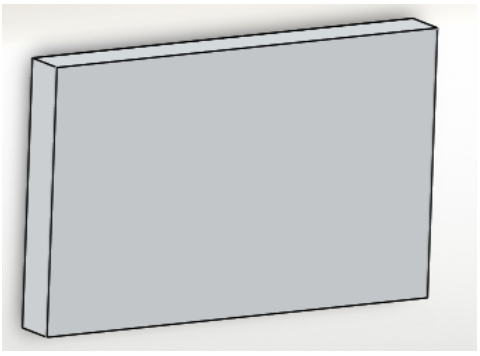

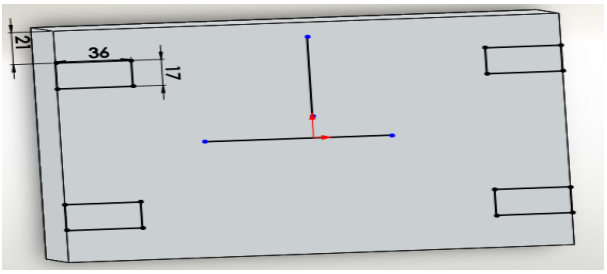

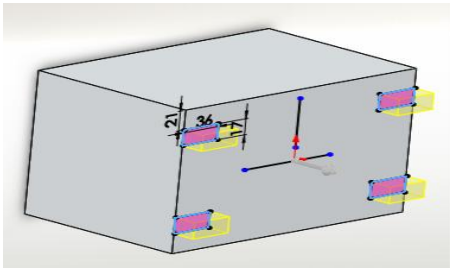

2.Take right plane draw the 2D sketch and extrude 38mm

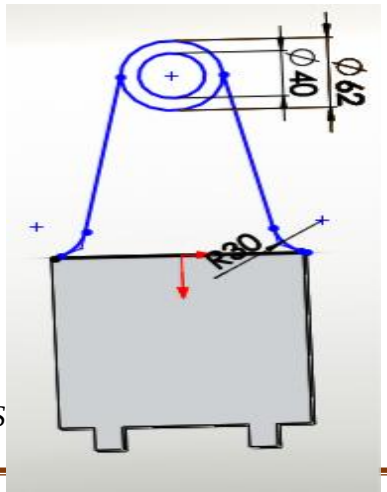

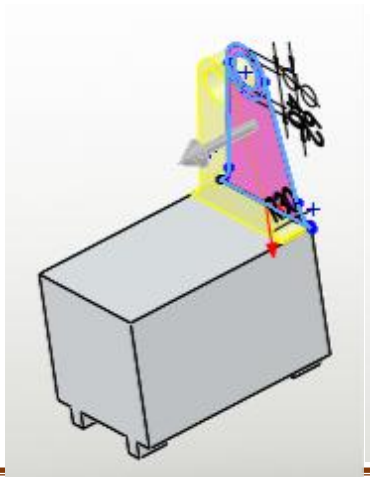

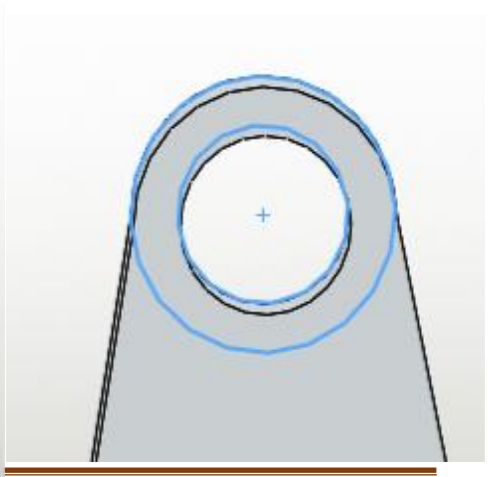

S

Extrude of 75 mm one side and 167 mm other side.

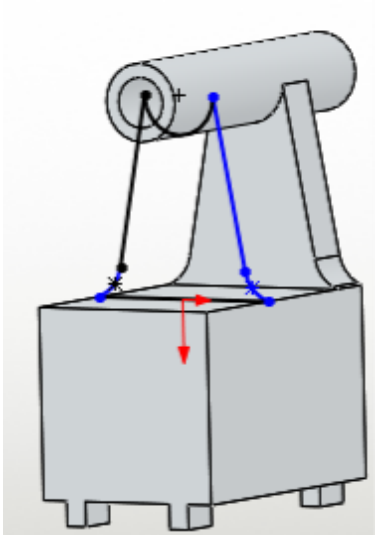

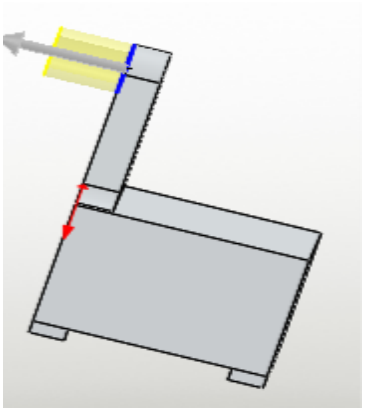

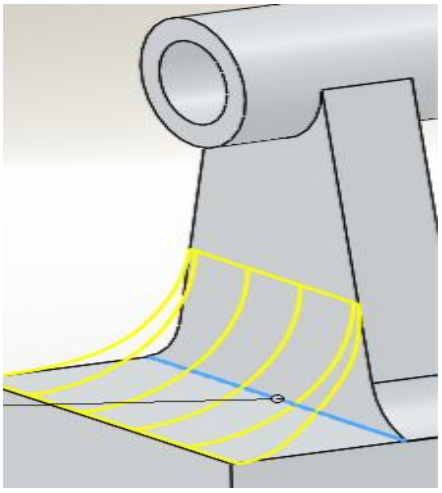

Select plane and offset of 146mm,after that create sketch. And extrude to 30 mm.

Once gain offset plane 190 mm. and fillet 60mm

Extrude 13 mm.

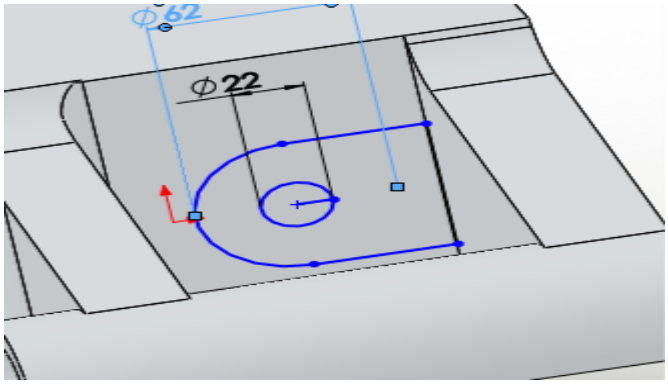

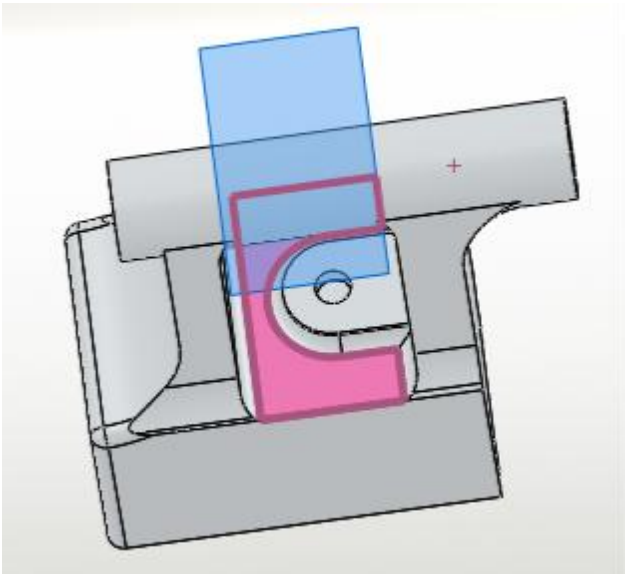

Create plane offset of 195 mm.

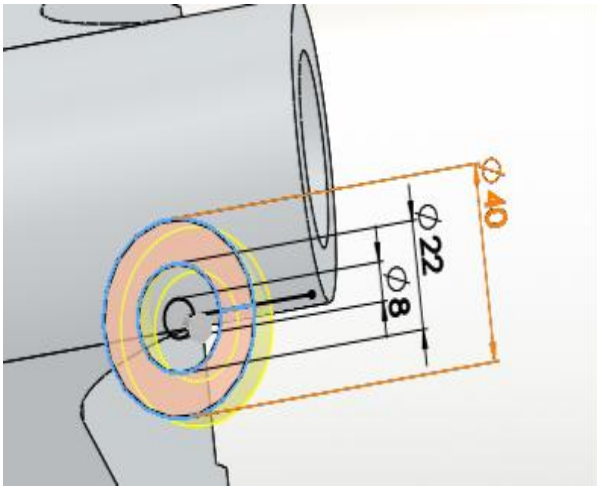

Create a 2D sketch on Front Plane as shown in the figure. (Right click the Front plane>insert sketch and draw the 2D sketch).

Extrude to 33 mm, (Select the face by (Enter Space bar> double click the plane) andDraw the 2D sketch as given above

Create Same size of boss at 4 mm distance with opposite direction.

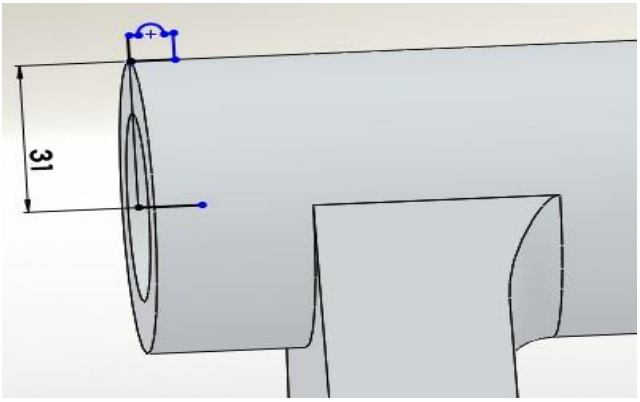

Create a 2D sketch on Front Plane as shown in the figure.

(Right click the Front plane>insert sketch and draw the 2D sketch).

Revolve, the sketch to 360 degree ontop sketched line, by (Insert> Boss/Base>Revolve)

ok. As per given below figure.

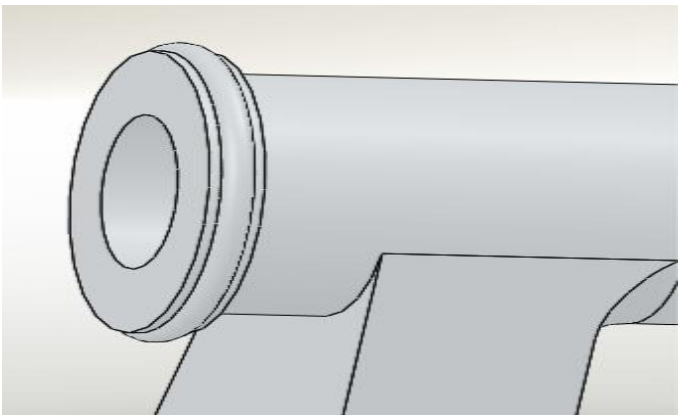

Remaining parts create as per the above said.

RESULT: *Thus the parametric feature based sold model of tailstock parts are created,assembled and the assembled model is saved for details drawing.*

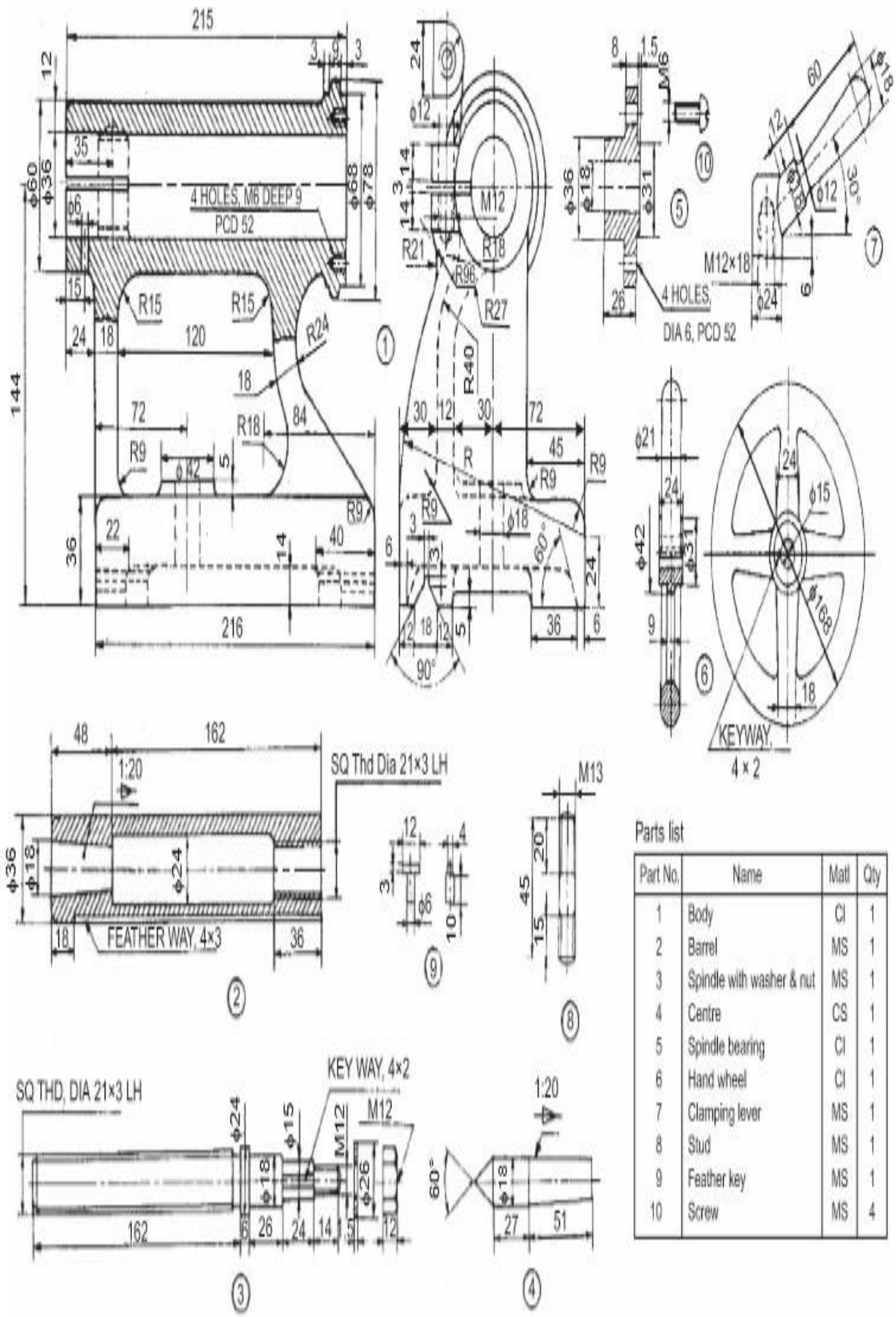

Parts list

Part No.	Name	Matl	Qty
1	Body	CI	1
2	Barrel	MS	1
3	Spindle with washer & nut	MS	1
4	Centre	CS	1
5	Spindle bearing	CI	1
6	Hand wheel	CI	1
7	Clamping lever	MS	1
8	Stud	MS	1
9	Feather key	MS	1
10	Screw	MS	4